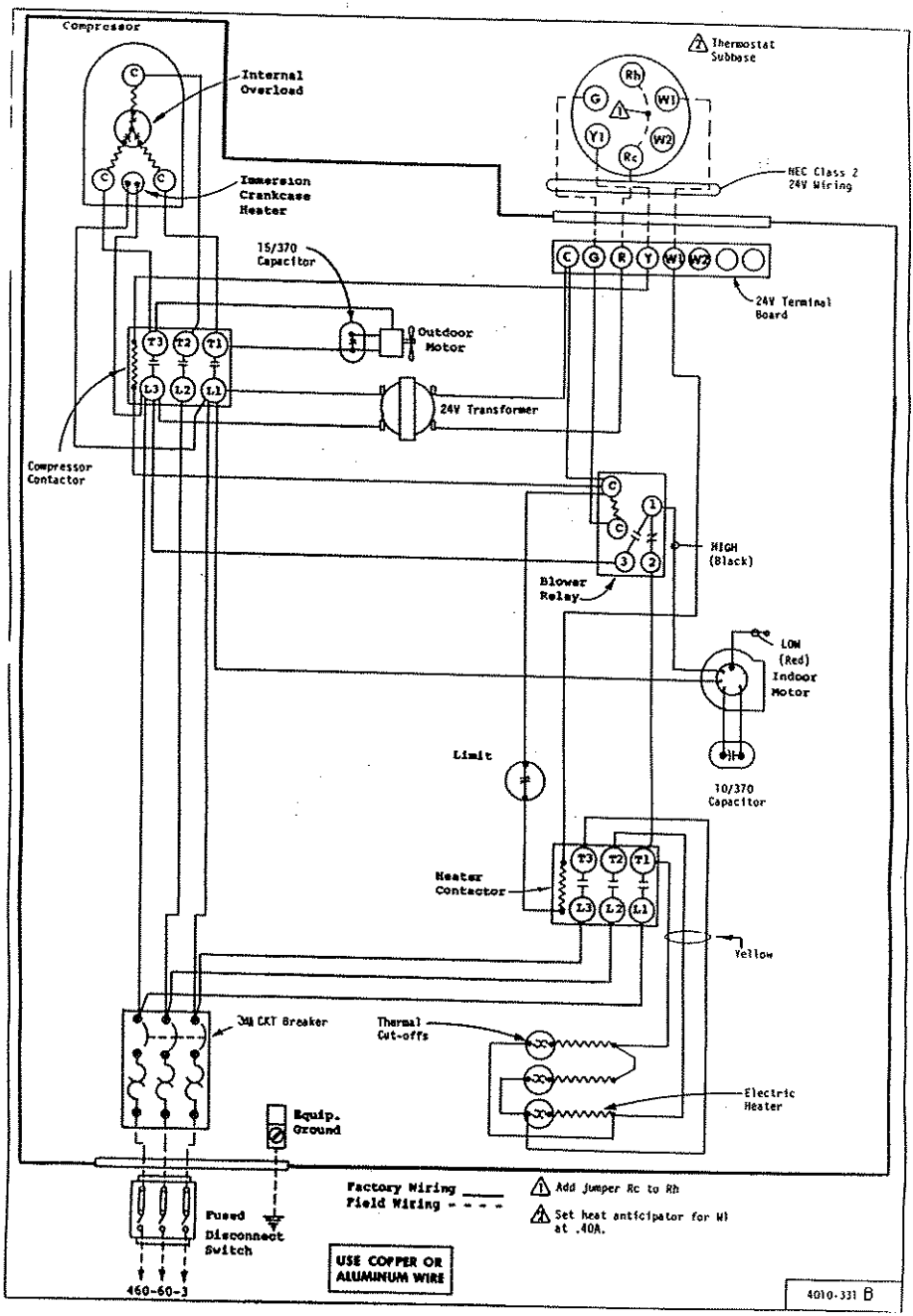
Compressor
Internal Overload
Immersion Crankcase Heater
Thermostat Subbase
Rh
G
W1
Y1
W2
Rc
NEC Class 2 24V Wiring
15/370 Capacitor
C G R Y W1 W2
24V Terminal Board
Outdoor Motor
T3 T2 T1
L3 L2 L1
24V Transformer
Compressor Contactor
C
1
3 2
HIGH (Black)
Blower Relay
LOW (Red)
Indoor Motor
Limit
10/370 Capacitor
Heater Contactor
Yellow
3Ø CKT Breaker
Thermal Cut-offs
Electric Heater
Equip. Ground
Fused Disconnect Switch
460-60-3
Factory Wiring
Field Wiring
Add jumper Rc to Rh
Set heat anticipator for W1 at .40A.
USE COPPER OR ALUMINUM WIRE
4010-331 B