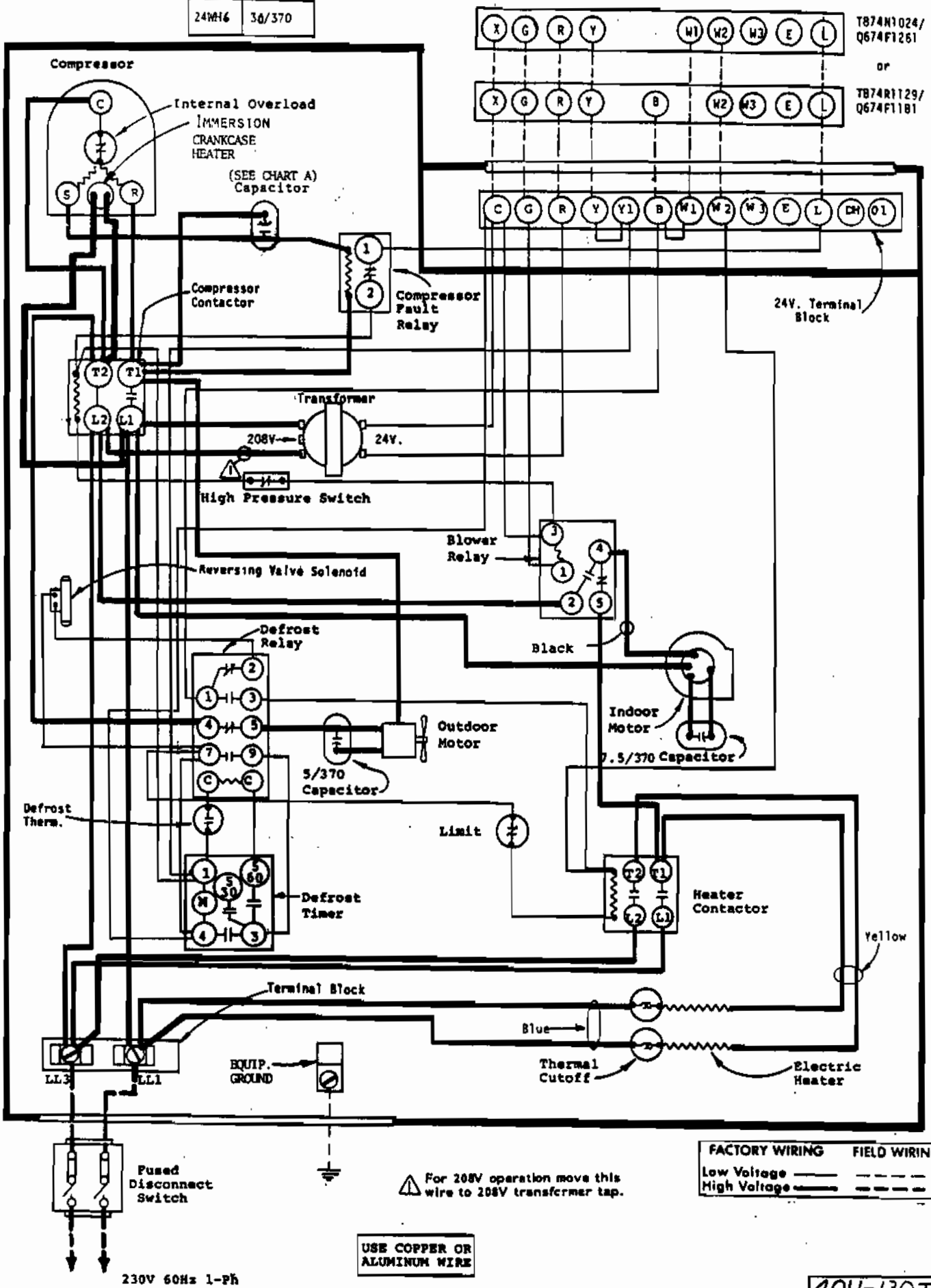CHART A	MODEL	CAPACITOR
	18WH6	25/370
	24WH6	30/370