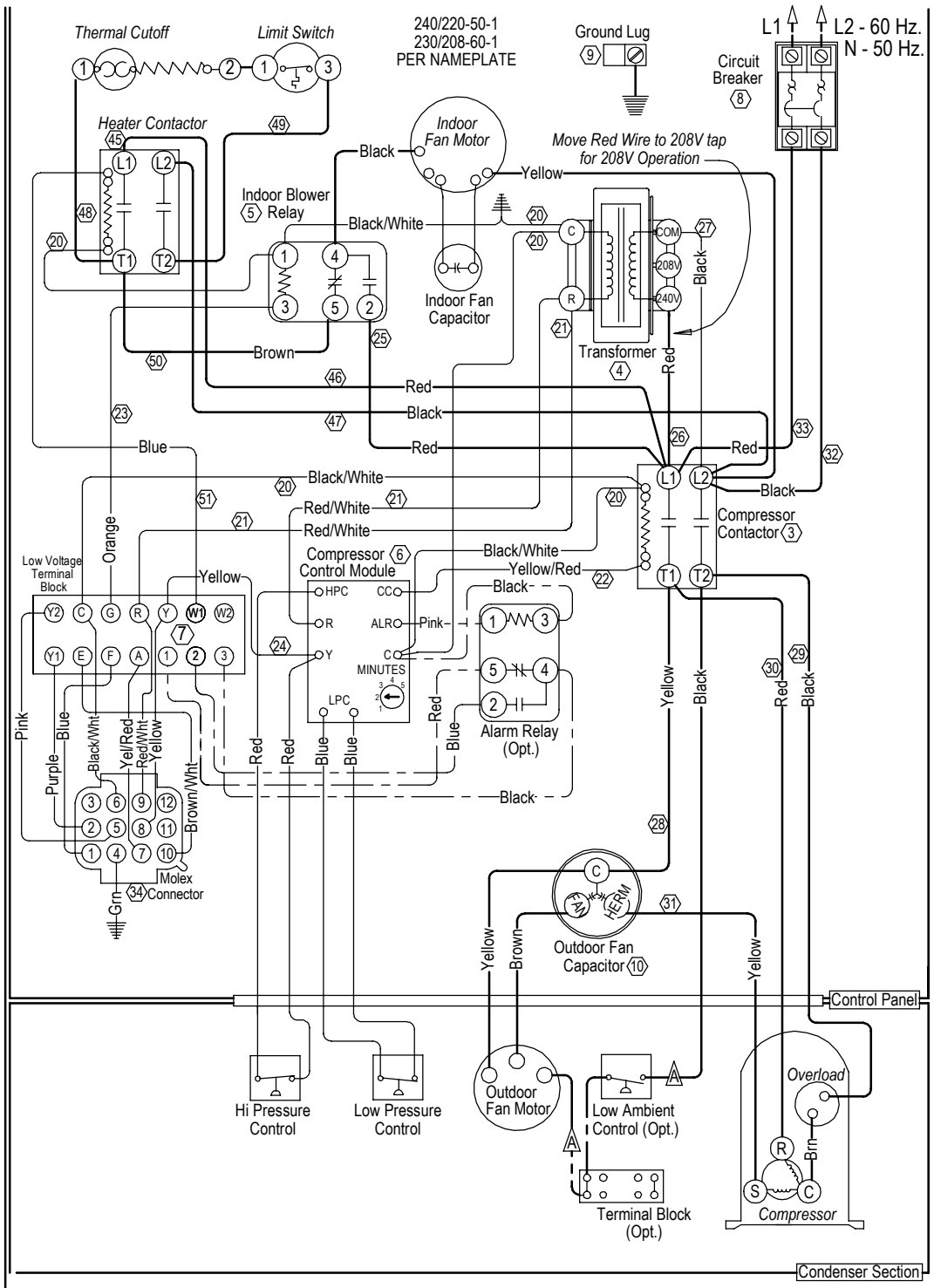

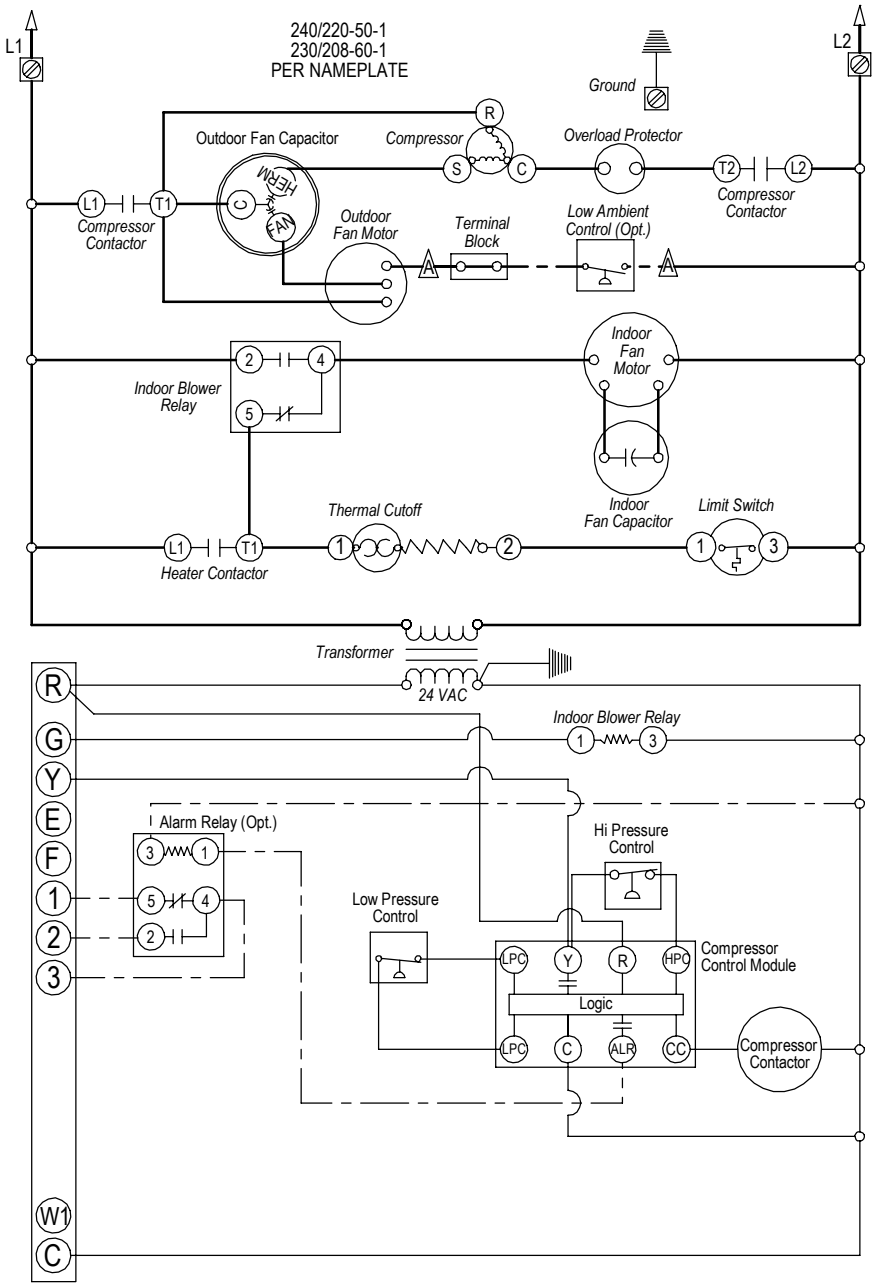

Wires Connect if Option Not Used	Factory	Field	Optional
High Voltage			
Low Voltage			

99 Wire Identification numbers for Bard use only.

WARNING
USE COPPER CONDUCTORS ONLY SUITABLE FOR AT LEAST 75° C.

DANGER
*ELECTRICAL SHOCK HAZARD
*DISCONNECT POWER BEFORE SERVICING.

4095-177 B