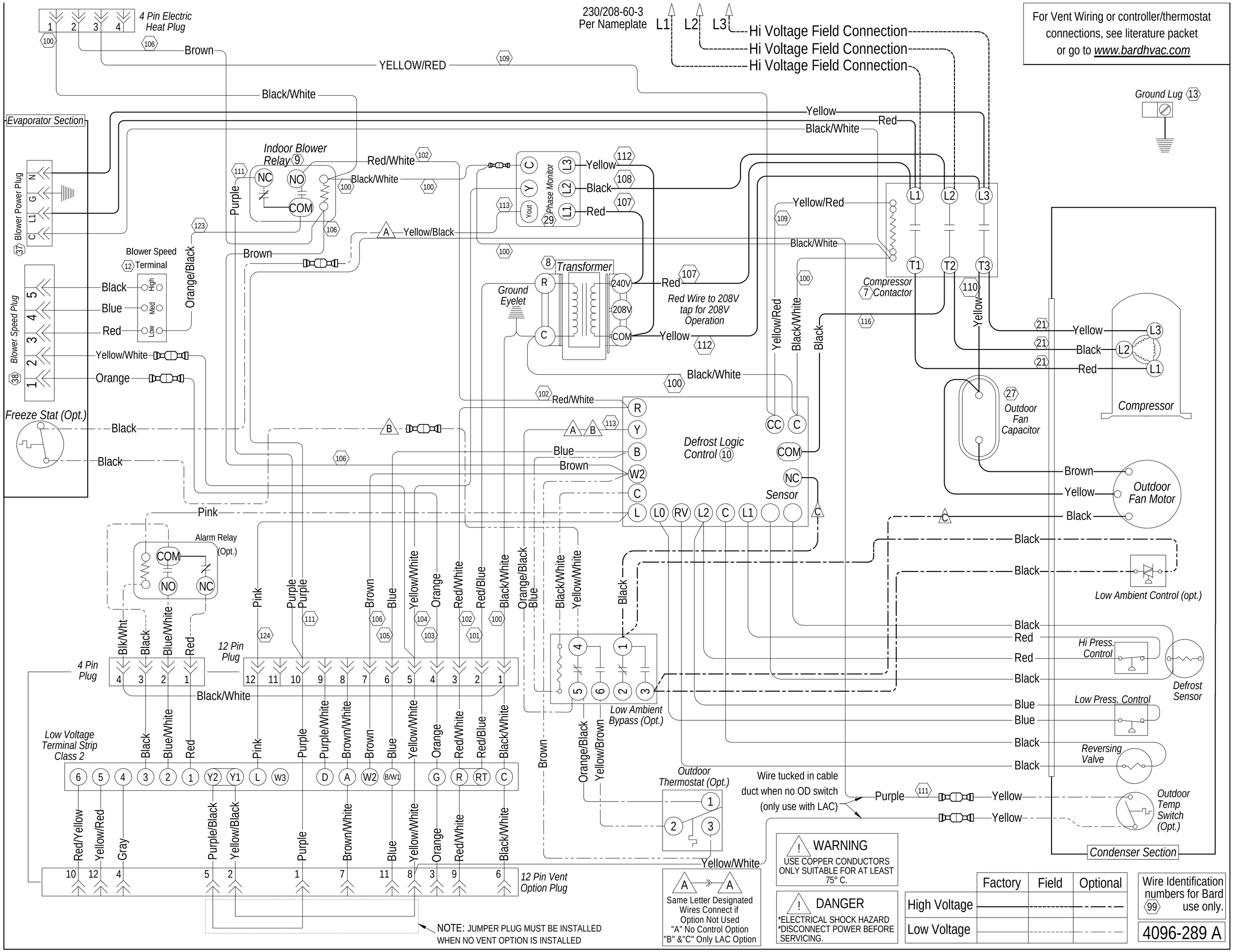
For Vent Wiring or controller/thermostat connections, see literature packet or go to www.bardhvac.com
230/208-60-3 Per Nameplate
L1
L2
L3
Hi Voltage Field Connection
Hi Voltage Field Connection
Hi Voltage Field Connection
4 Pin Electric Heat Plug
Ground Lug 13
Evaporator Section
Blower Power Plug
Blower Speed Plug
Indoor Blower Relay 9
NC
NO
COM
Phase Monitor
Yout
Transformer
240V
208V
COM
Ground Eyelet
Red Wire to 208V tap for 208V Operation
Blower Speed Terminal
High
Med
Low
Freeze Stat (Opt.)
Defrost Logic Control 10
Sensor
Compressor Contactor 7
Outdoor Fan Capacitor 27
Compressor
Outdoor Fan Motor
Alarm Relay (Opt.)
Low Ambient Control (opt.)
Hi Press. Control
Defrost Sensor
Low Press. Control
Reversing Valve
Outdoor Temp Switch (Opt.)
Condenser Section
4 Pin Plug
12 Pin Plug
Low Ambient Bypass (Opt.)
Low Voltage Terminal Strip Class 2
Outdoor Thermostat (Opt.)
Wire tucked in cable duct when no OD switch (only use with LAC)
12 Pin Vent Option Plug
NOTE: JUMPER PLUG MUST BE INSTALLED WHEN NO VENT OPTION IS INSTALLED
Same Letter Designated Wires Connect if Option Not Used
"A" No Control Option
"B" &"C" Only LAC Option
WARNING
USE COPPER CONDUCTORS ONLY SUITABLE FOR AT LEAST 75° C.
DANGER
*ELECTRICAL SHOCK HAZARD
*DISCONNECT POWER BEFORE SERVICING.
Factory
Field
Optional
High Voltage
Low Voltage
Wire Identification numbers for Bard use only. 99
4096-289 A