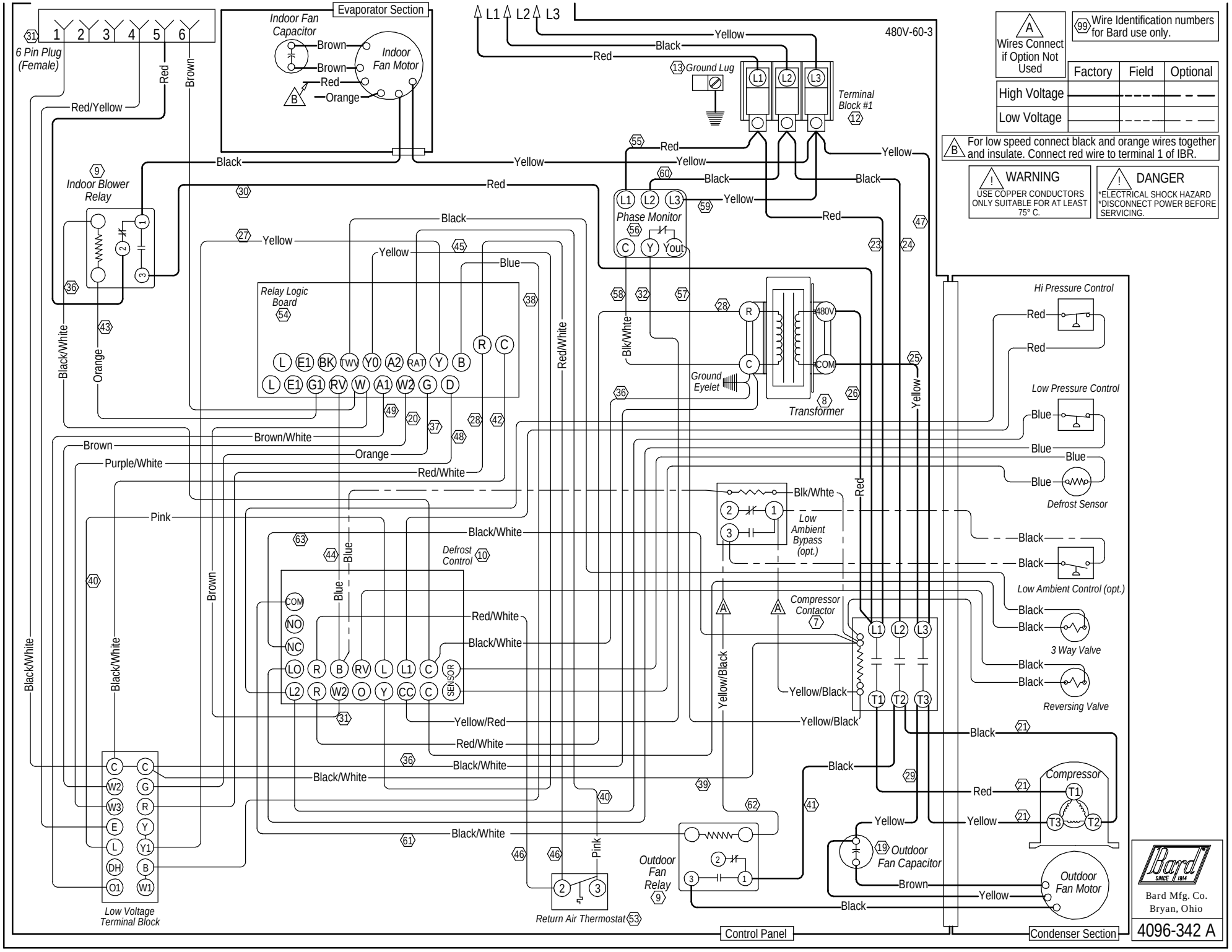
6 Pin Plug (Female)
Evaporator Section
Indoor Fan Capacitor
Indoor Fan Motor
L1 L2 L3
480V-60-3
Ground Lug
Terminal Block #1
Indoor Blower Relay
Phase Monitor
Relay Logic Board
Transformer
Ground Eyelet
Hi Pressure Control
Low Pressure Control
Defrost Sensor
Low Ambient Bypass (opt.)
Low Ambient Control (opt.)
3 Way Valve
Reversing Valve
Defrost Control
Compressor Contactor
Compressor
Outdoor Fan Capacitor
Outdoor Fan Motor
Outdoor Fan Relay
Return Air Thermostat
Low Voltage Terminal Block
Control Panel
Condenser Section
Wires Connect if Option Not Used
Wire Identification numbers for Bard use only.
Factory
Field
Optional
High Voltage
Low Voltage
For low speed connect black and orange wires together and insulate. Connect red wire to terminal 1 of IBR.
WARNING
USE COPPER CONDUCTORS ONLY SUITABLE FOR AT LEAST 75° C.
DANGER
*ELECTRICAL SHOCK HAZARD
*DISCONNECT POWER BEFORE SERVICING.
Bard Mfg. Co.
Bryan, Ohio
4096-342 A