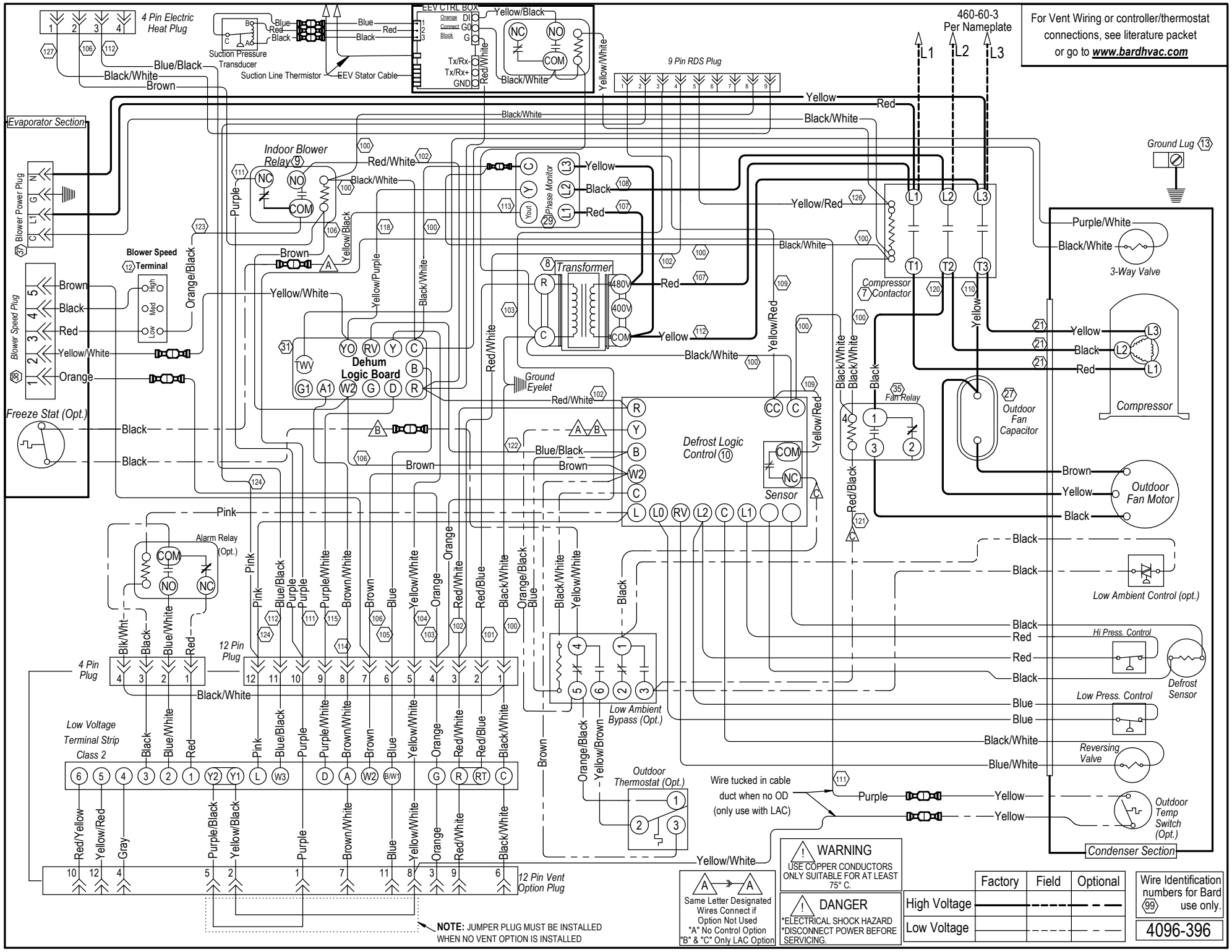
For Vent Wiring or controller/thermostat connections, see literature packet or go to www.bardhvac.com
460-60-3 Per Nameplate
L1
L2
L3
4 Pin Electric Heat Plug
Suction Pressure Transducer
Suction Line Thermistor
EEV Stator Cable
EEV CTRL BOX
Orange Connect Block
DI
G0
G
Tx/Rx-
Tx/Rx+
GND
9 Pin RDS Plug
Evaporator Section
Blower Power Plug
Blower Speed Plug
Blower Speed Terminal
High
Med
Low
Indoor Blower Relay 9
NC
NO
COM
Phase Monitor
Yout
Transformer
480V
400V
Dehum Logic Board
TWV
YO
RV
Y
C
B
G1
A1
W2
G
D
R
Ground Eyelet
Freeze Stat (Opt.)
Defrost Logic Control 10
CC
Sensor
Fan Relay
Compressor Contactor
Outdoor Fan Capacitor
Compressor
Outdoor Fan Motor
3-Way Valve
Ground Lug 13
Alarm Relay (Opt.)
Low Ambient Control (opt.)
Hi Press. Control
Low Press. Control
Defrost Sensor
Reversing Valve
Outdoor Temp Switch (Opt.)
Condenser Section
4 Pin Plug
12 Pin Plug
Low Ambient Bypass (Opt.)
Low Voltage Terminal Strip Class 2
Y2
Y1
W3
B/W1
RT
Outdoor Thermostat (Opt.)
Wire tucked in cable duct when no OD (only use with LAC)
12 Pin Vent Option Plug
NOTE: JUMPER PLUG MUST BE INSTALLED WHEN NO VENT OPTION IS INSTALLED
Same Letter Designated Wires Connect if Option Not Used
"A" No Control Option
"B" & "C" Only LAC Option
WARNING
USE COPPER CONDUCTORS ONLY SUITABLE FOR AT LEAST 75° C.
DANGER
*ELECTRICAL SHOCK HAZARD
*DISCONNECT POWER BEFORE SERVICING.
Factory
Field
Optional
High Voltage
Low Voltage
Wire Identification numbers for Bard use only.
4096-396