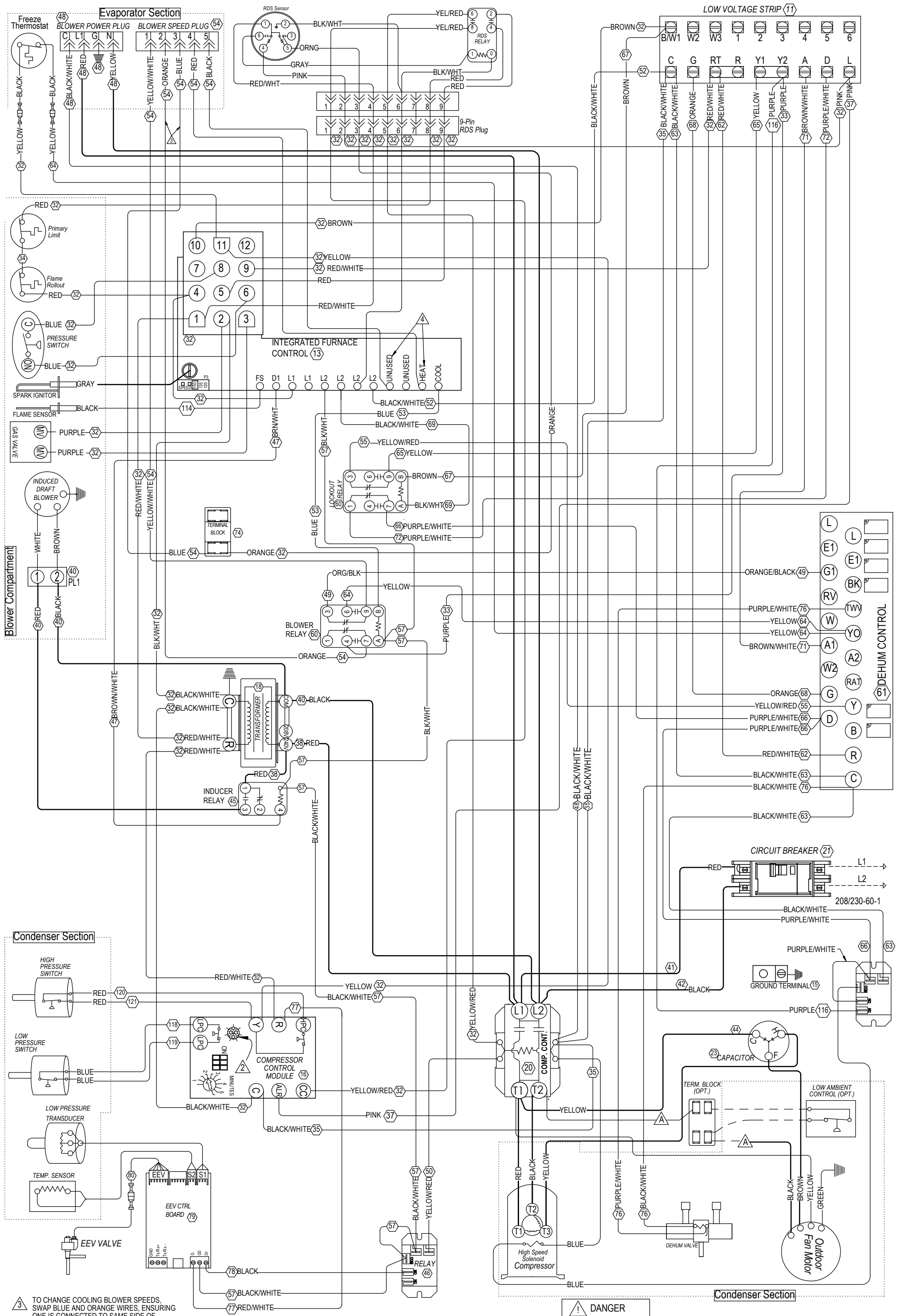

3 TO CHANGE COOLING BLOWER SPEEDS, SWAP BLUE AND ORANGE WIRES, ENSURING ONE IS CONNECTED TO SAME SIDE OF TERMINAL BLOCK AS EXISTING ORANGE WIRE AT ALL TIMES

4 PLACE RED WIRE ON "HEAT" PIN FOR 45K,67.5K,AND 75K HEAT PACKAGES, AND BLACK WIRE ON "HEAT" PIN FOR 90K,100K,AND 125K

IF ANY ORIGINAL WIRES SUPPLIED WITH THE APPLIANCE MUST BE REPLACED, IT MUST BE REPLACED WITH WIRING MATERIAL HAVING A TEMPERATURE RATING OF AT LEAST105° C EXCEPT THE IGNITION CABLE WHICH IS 250°C HIGH VOLTAGE CABLE

A → A Same Letter Designated Wires Connect if Option Not Used

Wire Identification numbers for Bard use only. 99

2 RED - HIGH PRESSURE FAULT
BLUE - LOW PRESSURE FAULT
BLUE FLASH - LOW VOLTAGE

DANGER
*ELECTRICAL SHOCK HAZARD
*DISCONNECT POWER BEFORE SERVICING.

WARNING
USE COPPER CONDUCTORS ONLY SUITABLE FOR AT LEAST 75° C.

	Factory	Field	Optional
High Voltage			
Low Voltage			

4218-102 A