5 Ton 208V to 460V 60hz 2 Stage Air Conditioner Specifications

11EER W5SAC Series WALL-MOUNT™

The Bard Wall-Mount Air Conditioner is an energy efficient self contained system, which is designed to offer maximum indoor comfort at a minimal cost without using valuable indoor floor space or outside ground space. This unit is the ideal product for versatile applications such as: new construction, modular offices, school modernization, telecommunication structures, portable structures, correctional facilities and many more. Factory or field installed accessories are available to meet specific job requirements for your unique application.

- Complies with efficiency requirements of ASHRAE/IESNA 90.1-2016
- Certified to ASNI/ARI Standard 390-2003 for SPVU (Single Package Vertical Units)
- Intertek ETL Listed to Standard for Safety Heating and Cooling Equipment ANSI/UL 1995/CSA 22.2 No. 236-05 Fourth Edition
- Commercial Product - Not intended for residential application
- Bard is an ISO 9001:2015 Certified Manufacturer

Bard® SINCE 1914

ENGINEERED • BUILT • SUPPORTED IN THE USA

C ETL LISTED US Intertek

AHRI CERTIFIED™ www.ahridirectory.org Water Source HP ANSI/AHRI/ASHRAE/ISO13256-1

BARDHVAC.COM

FORM NO. S3598-0919

/////// WALL-MOUNT NOMENCLATURE

W 5 SA C - A 0 Z X P X X X X

UNIT SERIES
Wall-Mount

NOMINAL CAPACITY
5 - 5 Ton

FUNCTIONALITY
SA - Step Capacity 2 Stage Air Conditioner

REVISION
C Revision Level

PLACEHOLDER
- Standard

VOLTAGE
A - 230 Volt 1 Phase 60 Hz
B - 230 Volt 3 Phase 60 Hz
C - 460 Volt 3 Phase 60 Hz

ELECTRIC HEAT
00 - 0Kw with Lug Connection
0Z - 0Kw with Circuit Breaker
05 thru 15kw with Circuit Breaker
See Electrical Specs for further details

VENT PACKAGE
X - Fresh Air Damper
B - Block Off Plate
V - Comm. Ventilator, Modulating
D - Economizer, 0-10V No Controls
Y - Full Flow Economizer, JADE Dry Bulb
Z - Full Flow Economizer, JADE Enthalpy
R - Energy Recovery Vent

FILTER
X - 1" MERV2 Disposable Filter
W - 1" MERV2 Permanent Filter
P - 2" MERV8 Disposable Filter
M - 2" MERV11 Disposable Filter
N - 2" MERV13 Disposable Filter

COLOR AND CABINET FINISH
X - Beige baked enamel finish
1 - White baked enamel finish
4 - Buckeye Gray baked enamel finish
5 - Desert Brown baked enamel finish
8 - Dark Bronze baked enamel finish
S - Stainless Steel
A - Aluminum

PLACEHOLDER
"X"for future use

COIL & COATING OPTIONS
X - Standard
1 - Phenolic Coated Evaporator
2 - Phenolic Coated Condenser
3 - Phenolic Coated Evaporator and Condenser
4 - Coated Coils and condenser section
5 - Coated coils, inside and out side of unit

ACCESSORIES AND CONTROLS OPTIONS
X - Standard controls
E - Low Ambient Control (LAC)
F - LAC, Alarm Relay (ALR), Filter Press. Switch (FPS)
J - LAC and Alarm Relay (ALR)
K - LAC and PTCR Start Kit
M - LAC, ALR, and PTCR Start Kit
V - DDC Control Sensor kit with 10K Discharge air sensor, indoor blower airflow sensor, compressor current sensor, filter press. switch, LAC, ALR.

/////// ENGINEERED FEATURES

NEW! EXCLUSIVE *Non-Fiberglass Foil Faced Insulation: Environmentally friendly high "R" value non-fiberglass insulation that is made with recycled denim and cotton materials used with a FSK foil face that is both durable and cleanable.

Durable Cabinet Construction: Multiple cabinet construction options are available for different outdoor conditions. Optional cabinet coatings may be ordered for corrosive outdoor environments. Front access control panel location.

Green Fin Hydrophilic Evaporator Coil: Green fin stock enhances coil wettability to help prevent mold growth, aid with condensate drainage, and provide a limited amount of protection to corrosive particulates in the airstream.

***Balanced Climate™ Technology (patent pending):** High latent capacity humidity & sound reduction removes up to 35% more humidity than any other wall mount on the market with the use of a 2 stage thermostat or controlling device. Bard Balanced Climate™ innovation comes standard on all models.

Optional Mechanical Dehumidification: Models are available with hot gas reheat dehumidification for energy efficient humidity removal. Electronic Expansion Valves are standard for all dehumidification models.

Field or Factory Installed Vents: Multiple ventilation options are available as easily installed kits with electrical plugs, or Factory installed options that can be removed for service. Economizer operation includes improved airpath for minimized recirculation and does not require an intake hood.

Reliable, Easy-to-Use Controls: Easily accessible through front control panel locations. A lockable hinged access cover to circuit protection is provided. Phase rotation monitor is standard on all 3 phase models. Adjustable compressor on/off delay timer (CCM) with diagnostic lights is standard on all models.

ECM Indoor Motor Technology: 5 speed dual shaft motor provides quiet airflow operation when used with a twin blower assembly. Motor overload protection standard on all models.

Electric Strip Heat: Reliable, comfortable heater packages feature an automatic limit and thermal cut-off safety control. Heater packages can be factory or field installed.

Easy Filter Access: A separate filter door is provided for ease of filter access during routine unit maintenance. 1" and 2" filters are available with a rating of up to MERV13.

Enclosed Condenser Motor: An enclosed casing condenser motor with ball bearings is used for reliable operation and extended motor life. Enclosed condenser motors are standard on all units.

Improved Condenser Coil Cleaning: Removable fan shroud side panels allow for easy condenser coil intake surface cleaning.

High Efficiency Cooling: 2 Stage (66% and 100%) Scroll compressors for quiet, efficient cooling. Designed with R-410A (HFC) non-ozone depleting refrigerant in compliance with the Montreal protocol and 2010 EPA requirements. A liquid line filter-drier to protect the system from moisture is standard on all units.

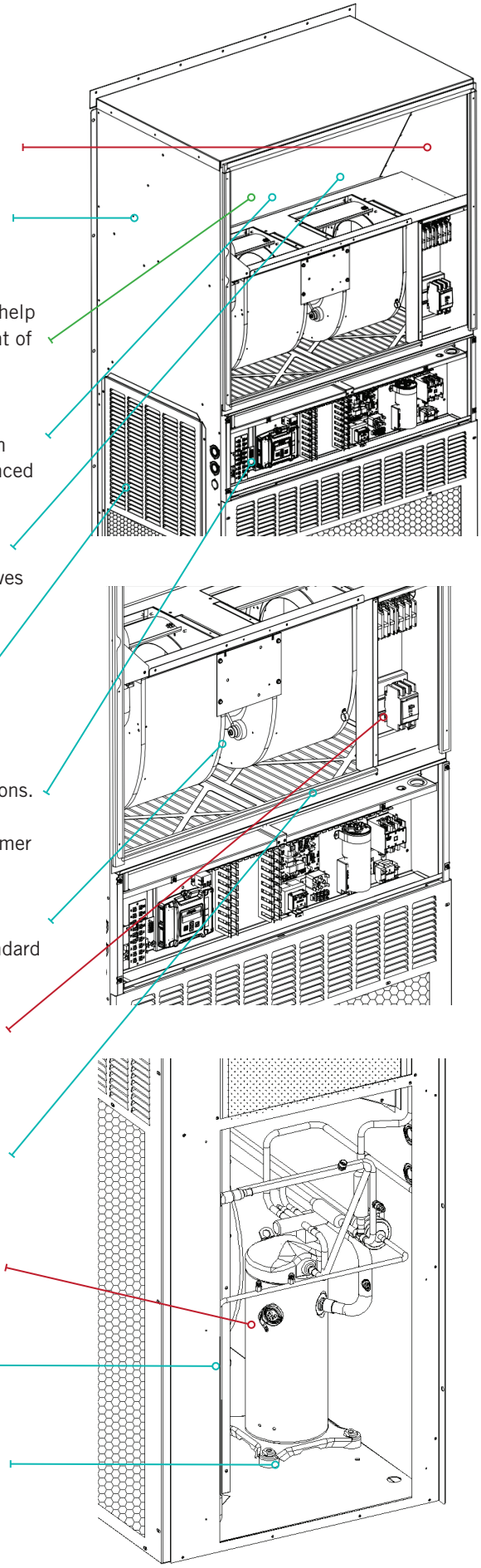

/////// UNIT MODES OF OPERATION

Cooling Operation: The Bard WAS Series WALL MOUNT products offer two stage cooling operation using R410A refrigerant. Copper tube/Aluminum hydrophilic green fin coils are used to provide high efficiency and easy serviceability. Scroll compressor technology delivers years of quiet, reliable operation.

Heating Operation: The Bard WA Series WALL MOUNT products offer optional single or two stage heating operation using resistance heaters. Circuit breaker disconnect protection is standard in all units equipped with electric heat.

Mechanical Dehumidification Operation: The Bard W5SAC Series WALL MOUNT products offer optional dehumidification operation that removes moisture from air entering the unit. A three-way valve, reheat coil, and electronic expansion valve (EEV) are standard with all models. The dehumidification circuit incorporates an independent heat exchanger coil in the supply air stream. This coil reheats the supply air after it passes over the cooling coil without requiring the electric resistance heater to be used for reheat purposes. This results in very high mechanical dehumidification capability from the air conditioner on demand without using electric resistance reheat. Airflow is reduced resulting in quiet and comfortable soft shift to dehum mode.

Ventilation Operation: The Bard WA Series WALL MOUNT products offer optional ventilation operation that brings outdoor air into the structure. Vent options can be factory or field installed, and can be used to bring in outdoor air for occupants, save energy by using outdoor air for free cooling, or positively pressurize a structure. Exhaust air options allow room air to be vented outdoors when fresh air is being brought into the structure. Energy recovery options are also available for occupied structures which condition the air being brought in to save energy when ventilation is necessary regardless of outdoor temperature.

Balanced Climate™ Operation: Balanced Climate™ is a great comfort feature that can easily be applied under any normal circumstances. If you are setting up your Bard system to air condition in a typical environment where 72 degrees is your lowest cooling set-point, then remove the Y1/Y2 jumper, and install a two stage cooling thermostat. You will increase your humidity removal up to 35% and provide a much more comfortable environment.

If you intend air conditioning below 60° outdoor conditions, then just like any other system, a LAC kit must be installed.

If you are installing the unit with any ventilation package , a Bard LAC Kit must be installed. Failure to utilize a LAC with any air conditioner can cause coil freeze up.

Balanced Climate can readily be applied to Duct-Free (supply & return air grille) applications. It may also be applied to ducted applications with limited static of 0.20" ESP (total including both supply & return statics). Consult Bard Application Engineering for details prior to implementation.

CAUTION: Balanced Climate is not a replacement for a dehumidification (hot gas reheat) unit for extreme applications, but rather an enhancement feature for limited climates and applications.

/////// ADVANCED FEATURE DESCRIPTIONS

ECM Indoor Blower Motor: Energy efficient indoor brush-less DC blower motors use EC constant torque technology with 4 selectable pre-programmed speeds. By selecting the needed speed, the WALL MOUNT product can reduce or increase airflow. A NEMA48® frame enclosure is used. A high speed tap can be selected to offer the maximum CFM possible with the blower assembly.

Outdoor Fan Motor: Outdoor fan motors use ball bearing construction and are fully enclosed for increased life expectancy.

Non Fiberglass Cabinet Insulation: The WALL MOUNT products use advanced non-fiberglass insulation that is made with recycled denim materials. High "R" value, enhanced sound absorption, and reduced delamination are some of the features of this revolutionary product.

CAPACITY AND EFFICIENCY RATINGS

Models	W5SAC
Cooling Capacity BTUH, 2nd Stage Operation EER 2nd Stage Operation ①② Rated CFM (Wet Coil)	56,980 11.0 1700
Cooling Capacity BTUH, 1st Stage Operation EER 1st Stage Operation ② Rated CFM (Wet Coil)	42,492 11.4 1300
IPLV ③	15.3

① Certified in accordance with ANSI/ARI Standard 390-2003 for single package vertical units.
② EER = Energy Efficiency Ratio - BTU/WATT efficiency.
③ Integrated Part Load Value - BTU/WATT efficiency and certified in accordance with ANSI/ARI Standard 390-2003.
All capacity, efficiency and cost of operation information is based on operation with fresh air cover plate.
Cover plate is recommended for use to obtain maximum energy efficiency where ventilation air is not required.

SPECIFICATIONS - 5 TON

MODELS	W5SAC-A	W5SAC-B	W5SAC-C
Electrical Rating – 60 Hz	230/208 - 1	230/208-3	460 - 3
Operating Voltage Range	197-253	197-253	414-506
Compressor--Circuit A			
Voltage	230/208	230/208	460
Rated Load Amps	21.3/24.2	15.5/17.6	7.2
Branch Circuit Selection Current	24.3	17.6	7.7
Lock Rotor Amps	147/147	110/110	52
Compressor Type	Scroll	Scroll	Scroll
Fan Motor & Condenser			
Fan Motor--HP--RPM	1/3	1/3	1/3
Fan Motor--Amps	2.3	2.6	0.8
Fan--DIA/CFM	24” - 2900	24” - 2900	24” - 2900
Blower Motor & Evap.			
Blower Motor—HP-SPD	1/3 Variable	1/3 Variable	1/3 Variable
Blower Motor—Amps	2.3	2.3	1.6
Motor Type	Constant Torque ECM	Constant Torque ECM	Constant Torque ECM
CFM Cooling & E.S.P. w/Filter (Rated-Wet Coil)	1350-.15	1350-.15	1350-.15
Filter Sizes (inches) STD., 2 required	20x20x1	20x20x1	20x20x1
Basic Unit Weight-LBS.	490	490	490
Barometric Fresh Air Damper (X)	13	13	13
Barometric Damper w/ Exhaust (A)	16	16	16
Blank-Off Plate (B)	14	14	14
Commercial Room Ventilator (M, V)	42	42	42
Economizer (D, Z)	44	44	44
Energy Recovery Ventilator (R)			

OPTIONAL SHIPPING CRATES

Optional crates are available to help protect your valuable WALL MOUNT investment during shipping. Constructed from OSB sheathing with steel corner posts, and sized for standard truck transportation. Treated for pests in accordance with the International Plant Protection Convention, Publication 15, Annex 1. Packaging is acceptable for international shipments.

CRATE NO.	UNITS USING CRATE	DESCRIPTION
TBD	W5SAC	Standard Unit Crate

2ND STAGE COOLING APPLICATION DATA - OUTDOOR TEMPERATURE ①

MODEL	DB / WB ②	COOLING CAPACITY BTU/HR	75°F	80°F	85°F	90°F	95°F	100°F	105°F	110°F	115°F	120°F	125°F	131°F
W5SAC	75/62	Total Cooling	60100	57400	54700	52100	49600	47300	45000	42800	40600	38500	36500	34100
		Sensible Cooling	45900	44900	43800	42800	41800	40900	39900	38900	37900	37000	36000	34100
	80/67	Total Cooling	64200	62500	60700	58900	56980	55100	53100	51000	48900	46700	44500	41700
		Sensible Cooling	44500	44000	43400	42800	42200	41600	40900	40200	39400	38700	37900	36900
	85/72	Total Cooling	76500	73100	69700	66500	63300	60300	57300	54300	51400	48500	45800	42400
		Sensible Cooling	45600	44700	43600	42500	41400	40300	39000	37700	36300	35000	33500	31800

① Low ambient control allows for compressor operation down to 0°F.
② Outdoor temperatures shown are measured at the condenser section air inlet.
③ Return air temperature °F.

CAPACITY MULTIPLIER FACTORS			
% of Rated Airflow	-10	Rated	+10
Total BTUH	0.975	1.0	1.02
Sensible BTUH	0.950	1.0	1.05

1ST STAGE COOLING APPLICATION DATA - OUTDOOR TEMPERATURE ①②

MODEL	DB / WB ②	COOLING CAPACITY BTU/HR	75°F	80°F	85°F	90°F	95°F	100°F	105°F	110°F	115°F	120°F	125°F	131°F
W5SAC	75/62	Total Cooling	44600	42300	40300	38600	37000	35800	34800	34000	33400	33000	32800	33000
		Sensible Cooling	34200	33300	32500	31800	31200	30700	30200	29900	29600	29300	29200	33000
	80/67	Total Cooling	47600	46100	44700	43600	42492	41700	41000	40500	40200	40000	40000	40300
		Sensible Cooling	33100	32600	32200	31800	31500	31200	31000	30900	30800	30700	30700	30800
	85/72	Total Cooling	56700	53900	51400	49200	47200	45600	44200	43100	42300	41600	41200	41000
		Sensible Cooling	33900	33100	32400	31600	30900	30200	29600	29000	28400	27800	27200	26500

① Low ambient control allows for compressor operation down to 0°F.
② Outdoor temperatures shown are measured at the condenser section air inlet.
③ Return air temperature °F.

CAPACITY MULTIPLIER FACTORS			
% of Rated Airflow	-10	Rated	+10
Total BTUH	0.975	1.0	1.02
Sensible BTUH	0.950	1.0	1.05

R410A UNIT CHARGE RATES

UNIT	STD. UNIT - LBS.	DEHUM. UNITS - LBS.
W5SAC	9.25	9.50

/////// BALANCED CLIMATE APPLICATION DATA (OPTIONAL, REQUIRES 2 STAGE COOLING THERMOSTAT)

MODEL	RETURN AIR (DB/WB)	COOLING CAPACITY	75°F	80°F	85°F	90°F	95°F	100°F	105°F	110°F	115°F	120°F	125°F
W5SAC	75/62	Total Cooling	58100	55200	52400	49900	47500	45300	43300	41400	39600	38000	36500
		Sensible Cooling	40700	39300	38000	36800	35700	34700	33700	32900	32100	31300	30800
		Latent Cooling	17400	15900	14400	13100	11800	10600	9600	8500	7500	6700	5700
		% Latent Increase	17%	20%	22%	27%	**31%**	**37%**	43%	52%	61%	75%	93%
		Lbs. H2O per Hr.	16.42	15	13.58	12.36	11.13	10	9.057	8.019	7.075	6.321	5.377
	80/67	Total Cooling	62000	60100	58200	56400	54500	52800	51100	49400	47700	46100	44500
		Sensible Cooling	39500	38500	37600	36800	36000	35300	346	34000	33400	32800	32400
		Latent Cooling	22500	21600	20600	19600	18500	17500	16500	15400	14300	13300	12100
		% Latent Increase	12%	13%	14%	16%	18%	21%	24%	28%	32%	38%	45%
		Lbs. H2O per Hr.	21.23	20.38	19.43	18.49	17.45	16.51	15.57	14.53	13.49	12.55	11.42
	85/72	Total Cooling	73900	70300	66800	63700	60500	57800	55100	52600	50100	47900	45800
		Sensible Cooling	40500	39100	37800	26600	35300	34200	33000	31900	30800	29600	28700
		Latent Cooling	33400	31200	29000	27100	25200	23600	22100	20700	19300	18300	17100
		% Latent Increase	6%	7%	8%	10%	11%	14%	15%	18%	21%	25%	28%
		Lbs. H2O per Hr.	31.51	29.43	27.36	25.57	23.77	22.26	20.85	19.53	18.21	17.26	16.13

① Low ambient operation disables Balanced Climate Operation.
② Outdoor temperatures shown are measured at the condenser section air inlet.
③ Return air temperature °F.
④ % Latent increase is a comparison to non-Balanced Climate unit operation.

CAPACITY MULTIPLIER FACTORS			
% of Rated Airflow	-10	Rated	+10
Total BTUH	0.975	1.0	1.02
Sensible BTUH	0.950	1.0	1.05

/////// INDOOR AIRFLOW CFM @ STATIC PRESSURES - EC BLOWER CONSTANT TORQUE MOTOR WITH ADJUSTMENT SPEEDS

ESP	W5SAC BLOWER TAPS - DRY/WET COIL CFM				
In H2O	Blower and Vent Only	Balanced Climate and Part Load Cooling	Default LO Full Load Cooling and Heating	Optional MED Full Load Cooling and Heating	Optional HI Full Load Cooling and Heating
0"	1960/1870	1540/1480	1960/1870	2085/1985	2160/2065
.1"	1880/1815	1365/1320	1880/1815	2005/1925	2070/1985
.15"	1840/1785	1285/1245	1840/1785	1970/1895	2025/1950
.2"	1805/1760	1215/1180	1805/1760	1935/1865	1990/1915
.3"	1735/1700	Not Used	1735/1700	1870/1810	1920/1855
.4"	1675/1635	Not Used	1675/1635	1815/1750	1865/1800
.5"	1625/1570	Not Used	1625/1570	1770/1700	1820/1755

Five factory programmed speed taps (torque settings) are available for the indoor blower motor, and are selected through different unit modes of operation. These modes are energized by 24VAC signals from the low voltage terminal block located inside the control panel by a thermostat or other controlling device.

1. Blower and Ventilation Only Speed is the CFM amount for continuous fan and ventilation without a call for cooling.

2. Balanced Climate Speed is the indoor CFM amount for user selectable Balanced Climate operation and optional Mechanical De humidification. To use Balanced Climate, remove the jumper between Y1 and Y2 on the low voltage terminal strip. A 2 stage cool ing thermostat is then used to control blower airflow stages. Be sure to follow all guidelines provided in the installation manual, and a controls kit that includes a low ambient control (LAC) must be used for Balanced Climate Operation. Balanced Climate can be used for duct free and ducted applications below 0.20"WC ESP total static. Balanced Climate provides increased moisture removal during the cooling cycle, but is not a replacement for optional mechanical dehumidification. Optional mechanical dehu midification provides moisture removal without significantly cooling the space being conditioned. Mechanical dehumidification is highly recommended for applications requiring indoor humidity control for schools, public areas, agricultural, pharmaceutical, and areas with high outdoor humidity and varying indoor heat load.

3. Default LO Cooling and Heating Speed is the indoor CFM amount for cooling operation using the default blower speed tap selec tion. This speed is labeled as LO on the speed selection terminal strip inside the unit control panel. All units ship with cooling and heating operation at LO cooling and heating speed, and provides the optimal airflow amount for normal use.

4. Optional MED Cooling and Heating Speed is selected manually during unit setup and provides a higher indoor CFM for hi static duct applications and increased airflow. This speed is labeled as MED on the speed selection terminal strip inside the unit control panel.

5. Optional HI Cooling and Heating Speed is selected manually during unit setup and provides the highest allowable indoor CFM amount. Not recommended for standard unit operation. This speed is labeled as HI on the speed selection terminal strip inside the unit control panel.

SOUND DATA - DBA @ 5 FT. AND 10 FT.*

DUCT FREE	INDOOR COOLING OPERATION @ 5 FT.			INDOOR COOLING OPERATION @ 10 FT.			OUTDOOR @ 10 FT.
Unit	Standard Grilles	With WMICF	With WMICF and WAPR-11	Standard Grilles	With WMICF	With WMICF and WAPR-11	Standard Features
W5SAC	TBD	TBD	TBD	TBD	TBD	TBD	TBD
W5SAC	TBD	TBD	TBD	TBD	TBD	TBD	TBD
W5SAC	TBD	TBD	TBD	TBD	TBD	TBD	TBD
W5SAC	TBD	TBD	TBD	TBD	TBD	TBD	TBD

DUCTED SUPPLY	INDOOR COOLING OPERATION @ 5 FT.			INDOOR COOLING OPERATION @ 10 FT.			OUTDOOR @ 10 FT.
Unit	Standard Grilles	With WMICF	With WMICF and WAPR-11	Standard Grilles	With WMICF	With WMICF and WAPR-11	Standard Features
W5SAC	TBD	TBD	TBD	TBD	TBD	TBD	TBD
W5SAC	TBD	TBD	TBD	TBD	TBD	TBD	TBD
W5SAC	TBD	TBD	TBD	TBD	TBD	TBD	TBD
W5SAC	TBD	TBD	TBD	TBD	TBD	TBD	TBD

ELECTRICAL SPECIFICATIONS — W**AC SERIES

MODEL	Rated Volts & Phase	No. Field Power Circuits	Single Circuit				Multiple Circuit											
			③ Minimum Circuit Ampacity	① Maximum External Fuse or Ckt. Brkr.	② Field Power Wire Size	② Ground Wire	③ Minimum Circuit Ampacity			① Maximum External Fuse or Ckt. Breaker			② Field Power Wire Size			② Ground Wire Size		
							Ckt. A	Ckt. B	Ckt. C	Ckt. A	Ckt. B	Ckt. C	Ckt. A	Ckt. B	Ckt. C	Ckt. A	Ckt. B	Ckt. C
W5SAC-A00, A0Z	230/208-1	1	38	60	8	10												
A05		1	38	60	8	10												
A10		1	59	60	6	10												
A15		1 or 2	85	90	3	8	59	26		60	30		6	10		10	10	
A20		1 or 2	111	125	2	6	59	52		60	60		6	6		10	10	
W5SAC-B00, B0Z	230/208-3	1	28	40	8	10												
B06		1	28	40	8	10												
B09		1	34	40	8	10												
B15		1	52	60	6	10												
B18		2	NA	N/A	N/A	N/A	34	28		40	30		8	10		10	10	
W5SAC-C00, C0Z	460-3	1	14	20	12	12												
C09		1	18	20	12	12												
C15		1	26	30	10	10												

① Maximum size of the time delay fuse or circuit breaker for protection of field wiring conductors.
② Based on 75°C copper wire. All wiring must conform to the National Electrical Code and all local codes.
③ These "Minimum Circuit Ampacity" values are to be used for sizing the field power conductors. Refer to the National Electrical code (latest version), Article 310 for power conductor sizing.

CAUTION: When more than one field power circuit is run through one conduit, the conductors must be derated. Pay special attention to Note 8 of Table 310 regarding Ampacity Adjustment Factors when more than three current carrying conductors are in a raceway.

IMPORTANT: While this electrical data is presented as a guide, it is important to electrically connect properly sized fuses and conductor wires in accordance with the National Electrical Code and all local codes.

HEATER PACKAGES - FIELD INSTALLED "C" SERIES UNITS

- Designed for adding Electric Heat to 0 KW Units
- Circuit Breaker Standard on 230/208V Models
- ETL US & Canada Listed
- Toggle Disconnect Standard on 460V Models

Air Conditioner Models	-A00 Models 230/208-1		-B00 Models 230/208-3		-C00 Models 460-3	
	Heater Model #	KW	Heater Model #	KW	Heater Model #	KW
W5SAC	EHWA42C-A05	05	EHWA60C-B06	6		
	EHWA60C-A10	10	EHWA60C-B09	9	EHWA60C-C09	9
	EHWA60C-A15	15	EHWA60C-B15	15	EHWA60C-C15	15
	EHWA60C-A20	20	EHWA60C-B18	18		

ELECTRIC HEAT TABLE - REFER TO ELECTRICAL SPECIFICATIONS FOR AVAILABILITY BY UNIT MODEL

NOMINAL KW	AT 240V (1)				AT 208V (1)				AT 480V (2)			AT 460V (2)		
	KW	1-PH AMPS	3-PH AMPS	BTUH	KW	1-PH AMPS	3-PH AMPS	KW	KW	3-PH AMPS	KW	KW	3-PH AMPS	KW
4.0	4.0	16.7		13,652	3.00	14.4		10,239						
5.0	5.0	20.8		17,065	3.75	18.0		12,799						
6.0	6.0		14.4	20,478	4.50		12.5	15,359	6.0	7.2	20,478	5.52	6.9	18,840
8.0	8.0	33.3		27,304	6.00	28.8		20,478						
9.0	9.0		21.7	30,717	6.75		18.7	23,038	9.0	10.8	30,717	8.28	10.4	28,260
10.0	10.0	41.7		34,130	7.50	36.1		25,598						
15.0	15.0	62.5	36.1	51,195	11.25	54.1	31.2	38,396	15.0	18.0	51,195	13.80	17.3	47,099
18.0	18.0		43.3	61,434	13.50		37.5	46,076	18.0	21.7	61,434	16.56	20.8	56,519
20.0	20.0	83.3		68,260	15.00	72.1		51,195						

(1) These electric heaters are available in 230/208V units only.
(2) These electric heaters are available in 480V units only.

C SERIES WALL MOUNT™ VENTILATION OPTION SELECTION CHART

VENT CODE	FIELD INSTALL KIT	UNIT	OPERATION	DESCRIPTION
X	FAD-NE5	W5SAC	Barometric	Air damper provides slight positive room pressure during blower operation, No room air exhaust.
B	BOP5	W5SAC	No Ventilation	Insulated plates used to seal vent intake and exhaust openings.
V	CRV-V5	W5SAC	24V On/Off, 2-10V	Vent provides motorized spring return modulating or on/off operation to bring in outdoor air and exhaust room air. Minimum and occupied vent blade positions. No intake hood required.
D	ECON-NC5*	W5SAC	2-10V only	Full flow Economizer that uses 2 to 10V signal from a DDC control system or thermostat. No intake hood required.
Y	ECON-DB5	W5SAC	JADE Controller	Full flow Economizer that uses the JADE controller and included sensors to operate free cooling. Wet or Dry Bulb operation user selectable. No intake hood required.
Z	ECON-WD5*	W5SAC	JADE Controller	Full flow Economizer that uses the JADE controller and included sensors to operate free cooling. Enthalpy or Dry Bulb operation user selectable. No intake hood required.
R	ERV-FA5*	W5SAC	24V On/Off, 3 blower speeds	208/230V Energy Recovery ventilator with energy wheel media. 3 independently selected intake and exhaust blower speeds. No intake hood required.
	ERV-FC5*	W5SAC	24V On/Off, 3 blower speeds	460V Energy recovery ventilator with energy wheel media. 3 independently selected intake and exhaust blower speeds. No intake hood required.

"X" Vent Code Option – Standard Fresh Air Damper No Exhaust (FAD-NE)
The barometric fresh air damper without exhaust is a standard feature on all models. It is installed on the inside of the service door and allows outside ventilation air, up to 25% of the total airflow rating of the unit, to be introduced through the air inlet openings and to be mixed with the conditioned air. The damper opens during blower operation and closes when the blower is off. Adjustable blade stops allow different amounts of outside air to be introduced into the building and can be easily locked closed if required. The room exhaust air path is sealed with an insulated block-off plate.

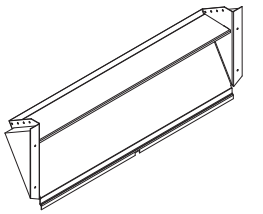

Barometric Fresh Air Damper

"B" Vent Code Option – Block Off Plate (BOP)
Blank off plates are installed on the inside of the service door and over the exhaust opening in the condenser partition. The plates cover the air inlet and room exhaust openings, which restricts any outside air from entering the unit or room air from leaving the conditioned space. The blank off plate option may be utilized in applications where outside air intake is not required by state or local codes.

"V" Vent Code Option – Commercial Room Ventilator with Modulating Blade position (CRV-V)
The built-in commercial room ventilator with modulating blade position is internally mounted behind the service door and allows outside ventilation air, up to 50% of the total airflow rating of the unit. It includes a built-in exhaust air damper for room pressurization relief. Blade seals allow for minimal blade leakage. A ventilation control board allows multiple blade settings to adjust intake airflow. By setting multiple blade positions, pre-purge, occupied, and unoccupied airflow amounts are possible with capable thermostats and controllers. The CRV-V also allows for 0-10V or 4-20ma input for modulating ventilation control based on CO2 levels. Complies with ANSI/ASHRAE Standard 62.1 "Ventilation for Acceptable Indoor Air Quality" and other state and local ventilation codes that require outdoor air intake but not economizer operation.

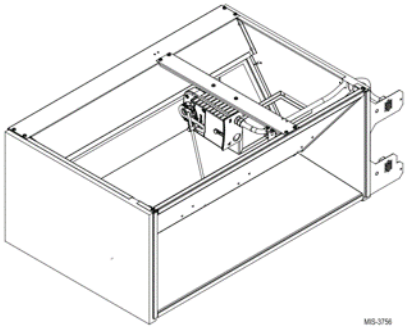

Commercial Room Ventilator- Modulating

"D" Vent Code Option – Economizer without controls installed (ECON-NC)
The built-in economizer is internally mounted behind the service door and allows outside ventilation air, up to 100% of the total airflow rating of the unit. It includes a built-in exhaust air damper for room pressurization relief. The economizer is designed to provide "free cooling" when outside air conditions are cool and dry enough to satisfy cooling requirements without running the compressor. This provides lower operating costs, extended equipment life, and cooling operation at cold (-40°F) outdoor temperatures. The ECON-NC does not contain unit ventilation controls, and provides a 0-10V Belimo actuator motor with spring return. Blade seals are used to minimize blade leakage. Controls are provided by using a field supplied DDC system, or a thermostat capable of 0-10V economizer operation. Indoor and outdoor temperature sensors are not provided with the ventilation option, and must be ordered separately.

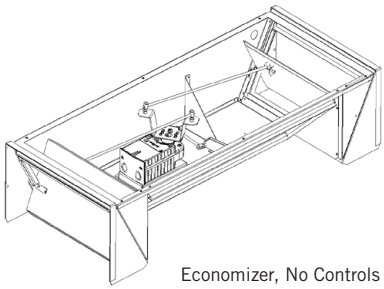
Economizer, No Controls

"Y and Z" Vent Code Option – Economizers with JADE® Controller (ECON-DB and ECON-WD)
The JADE controlled economizer is internally mounted behind the service door and allows outside ventilation air. The ECON-WD and ECON-DB5 allows up to 100% of the total airflow rating of the unit. Both include a built-in exhaust air damper for room pressurization relief. The economizer is designed to provide "free cooling" when outside air conditions are cool and dry enough to satisfy cooling requirements without running the compressor. This provides lower operating costs, extended equipment life, and cooling operation down to -40°F outdoor temperatures. The ECON-WD provides operation based on outdoor temperature and humidity. The ECON-DB provides operation based on outdoor dry bulb only.

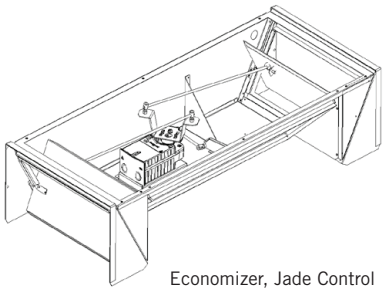
Economizer, Jade Control

"Y and Z" Vent Code Option – (ECON-WD) JADE® Controller Information
JADE Economizer controls provide Demand Ventilation Control, operational checkout, an easy to read LCD screen, configurable freeze protection, and LCD displayed economizer component failure alarms. Minimum vent position, occupancy ventilation, and 0-10V CO2 input is available for use with select CO2 room sensors. Economizer operation can be controlled by outdoor dry bulb or outdoor enthalpy measurement. When used with a Bard economizer assembly, the JADE controller is able to meet most state and local codes for economizer use.

Jade Control Module

JADE Controller Specifications:
- Operating Humidity Range (% RH) 5 to 95% RH, non-condensing
- Contact Ratings 30 VAC-- 1.5 A Run, 3.5 A Inrush
- Voltage 20 to 30 VAC RMS
- Operating Temperature Range (F) -40 F to +150 F
- Operating Temperature Range (C) -40 C to +65 C
- Approvals, Federal Communications Commission Compliant
- Approvals, CE Compliant
- Complies with California Title 24
- Mixed air and Outdoor Enthalpy Sensor using Sylk Bus.
- Output 2-10 VDC to actuator, Sylk Bus.

"R" Vent Code Option – Energy Recovery Ventilator (ERV-F)

The wall-mount energy recovery ventilator (ERV) is a highly innovative approach to meeting indoor air quality ventilation requirements as established by ANSI/ASHRAE Standard 62.1. The ERV allows up to 400 CFM (depending upon model) of fresh air and exhaust through the unit while maintaining superior indoor comfort and humidity levels. In most cases this can be accomplished without increasing equipment sizing or operating costs. Heat transfer efficiency is up to 67% during summer and 75% during winter conditions.

The ERV consists of a unique "rotary energy recovery cassette" that provides effective sensible and latent heat transfer capabilities during summer and winter conditions. Various control schemes are addressed including limiting ventilation during building occupancy only. The ERV is designed to be internally mounted behind the service door, and includes independent blowers for intake air and exhaust air balancing. It can be built-in at the factory or field installed as an option. Wiring includes plug-in harnesses for easy vent installation and removal.

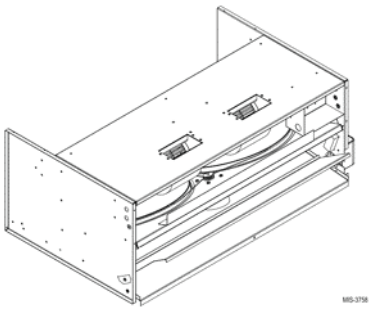

Energy Recovery Ventilator

Typical load reductions for ERV-F3

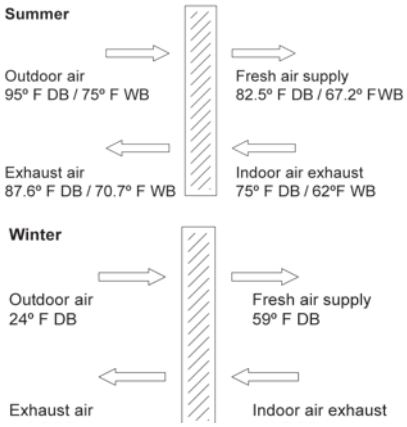

/////// WALL MOUNT™ BAROMETRIC DAMPER (FAD) PERFORMANCE

"X" (FAD-NE5) Barometric Damper Without Exhaust Vent Code Options

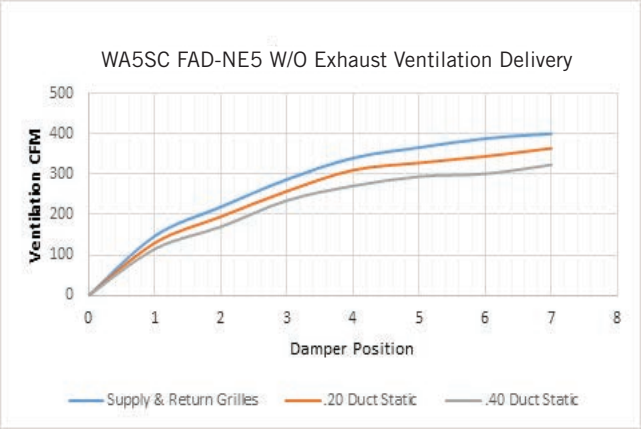

/////// WALL MOUNT™ VENTILATION AIRFLOW CHARTS

"V" (CRV-V) Vent Code Options

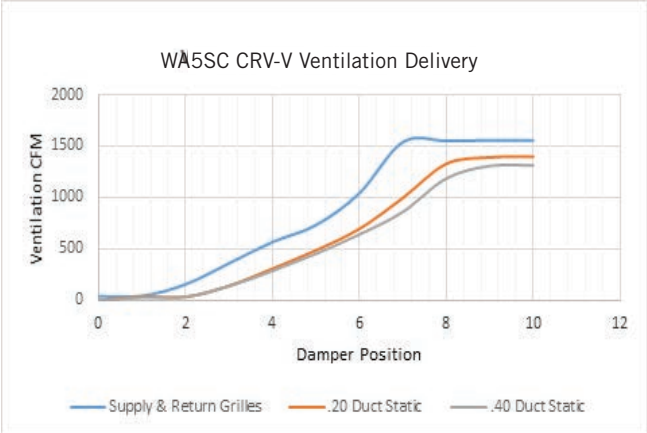

"D" (ECON-NC), "Y" (ECON-DB), and "Z" (ECON-WD) Vent Code Options

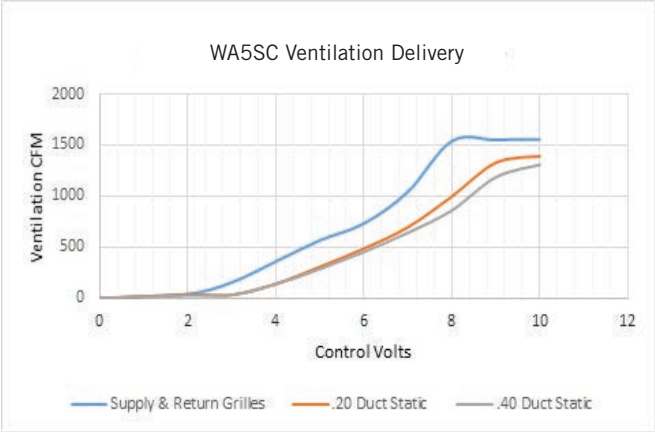

/////// WALL MOUNT™ ENERGY RECOVERY VENTILATION (ERV) PERFORMANCE

"R" (ERV-FA5 and ERV-FC5) Vent Code Options

SUMMER COOLING PERFORMANCE (INDOOR DESIGN CONDITIONS 75°DB/62°WB)

AMBIENT O.D.		VENTILATION RATE -- 400 CFM 63% EFFICIENCY						VENTILATION RATE -- 325 CFM 64% EFFICIENCY						VENTILATION RATE -- 250 CFM 65% EFFICIENCY					
DB/WB	F	VLT	VLS	VLL	HRT	HRS	HRL	VLT	VLS	VLL	HRT	HRS	HRL	VLT	VLS	VLL	HRT	HRS	HRS
105	75	21465	14580	6884	13952	9477	4475	17887	12150	5737	11805	8018	3786	14310	9720	4590	9587	6512	3075
	70	14580	14580	0	9477	9477	0	12150	12150	0	8018	8018	0	9720	9720	0	6512	6512	0
	65	14580	14580	0	9477	9477	0	12150	12150	0	8018	8018	0	9720	9720	0	6512	6512	0
100	80	31590	12150	19440	20533	7897	12635	26325	10125	16200	17374	6682	10692	21060	8100	12960	14110	5427	8683
	75	21465	12150	9314	13952	7897	6054	17997	10125	7762	11805	6682	5123	14310	8100	6210	9587	5427	4160
	70	12352	12150	202	8029	7897	131	10293	10125	168	6793	6682	111	8235	8100	135	5517	5427	90
	65	12150	12150	0	7897	7897	0	10125	10125	0	6682	6682	0	8100	8100	0	5427	5427	0
	60	12150	12150	0	7897	7897	0	10125	10125	0	6682	6682	0	8100	8100	0	5427	5427	0
95	80	31590	9720	21870	20533	6318	14215	26325	8100	18225	17374	5345	12028	21060	6480	14580	14110	4341	9768
	75	21465	9720	11744	13952	6318	7634	17887	8100	9787	11805	5345	6459	14310	6480	7830	9587	4341	5246
	70	12352	9720	2632	8029	6318	1711	10293	8100	2193	6793	5345	1447	8235	6480	1755	5517	4341	1175
	65	9720	9720	0	6318	6318	0	8100	8100	0	5345	5345	0	6480	6480	0	4341	4341	0
	60	9720	9720	0	6318	6318	0	8100	8100	0	5345	5345	0	6480	6480	0	4341	4341	0
90	80	31590	7290	24300	20533	4738	15794	26325	6075	20250	17374	4009	13365	21060	4860	16200	14110	3256	10854
	75	21465	7290	14175	13952	4738	9213	17887	6075	11812	11805	4009	7796	14310	4860	9450	9587	3256	6331
	70	12352	7290	5062	8029	4738	3290	10293	6075	4218	6793	4009	2784	8235	4860	3375	5517	3256	2261
	65	7290	7290	0	4738	4738	0	4050	6075	0	4009	4009	0	4860	4860	0	3256	3256	0
	60	7290	7290	0	4738	4738	0	4050	6075	0	4009	4009	0	4860	4860	0	3256	3256	0
85	80	31590	4860	26730	20533	3159	17374	26325	4050	22275	17374	2672	14701	21060	3240	17820	14110	2170	11939
	75	21465	4860	16605	13952	3159	10793	17887	4050	13837	11805	2672	9132	14310	3240	11070	9587	2170	7416
	70	12352	4860	7492	8029	3159	4870	10293	4050	6243	6793	2672	4120	8235	3240	4995	5517	2170	3346
	65	4860	4860	0	3159	3159	0	4050	4050	0	2672	2672	0	3240	3240	0	2170	2170	0
	60	4860	4860	0	3159	3159	0	4050	4050	0	2672	2672	0	3240	3240	0	2170	2170	0
80	75	21465	2430	19035	13952	1580	12372	17887	2025	15862	11805	1336	10469	14310	1620	12690	9587	1085	8502
	70	12352	2430	9922	8029	1580	6449	10293	2025	8268	6793	1336	5457	8235	1620	6615	5517	1085	4432
	65	4252	2430	1822	2764	1580	1184	3543	2025	1518	2338	1336	1002	2835	1620	1215	1899	1085	814
	60	2430	2430	0	1579	1580	0	2025	2025	0	1336	1336	0	1620	1620	0	1085	1085	0
75	70	12352	0	12352	8029	0	8029	10293	0	10293	6793	0	6793	8235	0	8235	5517	0	5517
	65	4252	0	4252	2764	0	2764	3543	0	3543	2338	0	2338	2835	0	2835	1899	0	1899
	60	0	0	0	0	0	0	0	0	0	0	0	0	0	0	0	0	0	0

ERV-FA5 WINTER HEATING PERFORMANCE (INDOOR DESIGN CONDITIONS 70°F DB)

AMBIENT O.D.	VENTILATION RATE					
	450 CFM 80% EFF.		375 CFM 81% EFF.		300 CFM 82% EFF.	
DB/°F	WVL	WVL	WVL	WVL	WVL	WHR
65	2430	1944	2025	1640	1620	1328
60	4860	3888	4050	3280	3240	2656
55	7290	5832	6075	4920	4860	3985
50	9720	7776	8100	6561	6480	5313
45	12150	9720	10125	8201	8100	6642
40	14580	11664	12150	9841	9720	7970
35	17010	13608	14175	11481	11340	9298
30	19440	15552	16200	13122	12960	10627
25	21870	17496	18225	14762	14580	11955
20	24300	19440	20250	16402	16200	13284
15	26730	21384	22275	18042	17820	14612

NOTE: Sensible performance only is shown for winter application.

LEGEND:

VLT = Ventilation Load - Total
VLS = Ventilation Load - Sensible
VLL = Ventilation Load - Latent
HRT = Heat Recovery - Total
HRS = Heat Recovery - Sensible
HRL = Heat Recovery - Latent
WVL = Winter Ventilation Load
WHR = Winter Heat Recovery

/////// CABINET AND COIL OPTIONS

Cabinet Finish Options

Unit models are available in Beige, White, Buckeye Gray, Desert Brown, Dark Bronze, stainless steel, and aluminum. Painted cabinet construction is comprised of 20 gauge Zinc coated steel. Parts are cleaned, rinsed, sealed, and dried before a polyurethane primer is applied. The cabinet coating is completed with a baked on textured enamel. The resulting finish is designed to withstand 1000 hours of salt spray tests per ASTM B117-03.

Stainless steel external cabinet construction is comprised of 316 grade materials. Stainless steel screws and fasteners are used in all externally exposed areas. A corrosion resistant coated fan blade and stainless steel condenser motor mount is provided.

Aluminum external cabinet construction is ASTM B 209 grade .06" thickness with a stucco appearance.

X—Beige

1—White

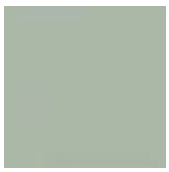

4—Gray

5—Desert

8—Bronze

S—Stainless

A—Aluminum

Stainless Steel Cabinet Construction

Exterior Stainless Steel finish cabinets are often selected for corrosion and chemical resistance. Higher grades of stainless steel are often specified to meet the requirements of harsh environments. Units may not only be exposed to wind - blown dust, dirt, lint, and fibers but also may be exposed to corrosive agents. The Bard stainless steel unit offers a high quality stainless steel grade enclosure and fasteners for years of operation in these conditions.

Features:

- Sides, doors, grilles, back panels, and top are 316 grade stainless steel.
- Base, condenser partition, and fan shroud are 304 grade stainless steel.
- Stainless steel exterior cabinet screws, washers, nuts, and bolts, are used.
- Stainless steel outdoor motor mount and motor mount hardware.
- Compressor mounting hardware is stainless steel and hex no-spin rivet nuts are used in the unit base.
- Corrosion resistant coating is applied to fan blade.

Bard highly suggests units exposed to extremely harsh environments, high quantities, of airborne dirt and dust, or sprayed with water hose and splashing water be ordered with the Blank Off Plate (BOP) ventilation option unless codes require fresh air intake. The BOP ventilation option installs plates over the fresh air intake and exhaust openings.

Green Fin Hydrophilic Evaporator Coils Standard On All Units

Bard WALL MOUNT products include a green protective coating applied to the aluminum fin stock used for the evaporator coil. The evaporator coil coating is hydrophilic (attracts water) and allows for proper condensate drainage along with mild corrosion protection. Resistance to corrosive agents include ammonia, sodium hydroxide, sodium chloride, acidic solutions and solvents.

/////// CABINET AND COIL OPTIONS

Evaporator and Condenser Coil Technicoat Coating Options
All models utilize a copper/aluminum evaporator and condenser coil. An additional corrosion resistant TechniCoat 10-2™ coating may be ordered for the condenser coil (option 1), evaporator coil (option 2) or both evaporator and condenser coils (option 3). TechniCoat is a proprietary epoxy-modified phenolic dip coating. Total Immersion ensures complete coverage with no significant loss of thermal efficiency. The 4-step coating system consist of (1) a multi-step cleaning process, (2) chemical etch primer, (3) epoxy-modified phenolic, and (4) phenolic sealer. The result is a corrosion resistant coil that outperforms a copper finned coil, is less expensive, and is also nearly 3 times lighter. ASTM B117 salt spray tests conducted show over 4500 hours with "no fin corrosion or degradation."

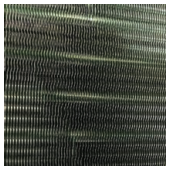

Hydrophilic Green Coil (standard)

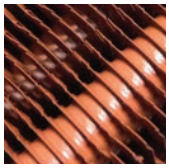

AeroMarine (optional)

Cabinet Coating Options
Bard recommends unit coatings be used in applications that may be exposed to corrosive particulates in the airstream. These applications include wastewater treatment plants, gas and oil refinery operations, battery manufacturers, areas with Sulfur water, wineries, chemical plants, pulp and paper mills, and seacoast installations. Contact your Bard distributor for additional information regarding cabinet coating options.

4= Exterior Unit Cabinet & Condenser Section
The 4 option unit contains our corrosion resistance phenolic coated coils and a coated unit condenser section. By coating the condenser section, the copper tubing, motor mount, sheet metal parts, filter/drier and compressor housing in the condenser area are protected with a epoxy semi-gloss coating.

5= Exterior & Interior
The 5 option unit contains our corrosion resistance phenolic coated coils and is both internally and externally coated. By coating the interior and exterior of the unit, the copper tubing, motor mount, sheet metal parts, filter/drier, compressor housing, blower assembly, and any optional ventilation features are protected with a epoxy semi-gloss coating. This is the highest level of protection available. It is required for applications where the internal and external features of the unit are exposed to a high level of salt or corrosive chemicals.

/////// WALL MOUNT™ FACTORY INSTALLED CONTROLS OPTIONS

Factory installed controls are provided by Bard to enhance a WALL MOUNT product before it is shipped. All WALL MOUNT products are shipped with a auto-reset high pressure switch and an auto-reset low pressure switch to help protect refrigeration components. A compressor control module with adjustable voltage protection, delay on make and break, and high/low pressure diagnostics is also standard

CONTROL CODE	DESCRIPTION OF FACTORY INSTALLED COMPONENTS
X	Hi Pressure Switch, Low Pressure Switch, Compressor Control Module.
E	Hi Pressure Switch, Low Pressure Switch, Compressor Control Module, **Low Ambient Control**
F	Hi Pressure Switch, Low Pressure Switch, Compressor Control Module, **Low Ambient Control, Dirty Filter Press. Switch**
J	Hi Pressure Switch, Low Pressure Switch, Compressor Control Module, **Low Ambient Control, Alarm Relay**
K	Hi Pressure Switch, Low Pressure Switch, Compressor Control Module, **Low Ambient Control, PTCR Start Kit**
M	Hi Pressure Switch, Low Pressure Switch, Compressor Control Module, **Low Ambient Control, Alarm Relay, PTCR Start Kit**
V	Hi Pressure Switch, Low Pressure Switch, Compressor Control Module, **Low Ambient Control, Alarm Relay, Discharge temperature sensor, Indoor Blower Airflow Press. Switch, Compressor Current Sensor, Dirty Filter Pressure Switch**

/////// WALL MOUNT™ FIELD INSTALLED KITS

Field installed kits provide accessories that can be installed in the field. Required components, wires, enclosures, screws, and instructions that are needed are provided within the kit.

CONTROL CODE	KIT PART NO.	UNITS USING KIT	DESCRIPTION OF FIELD INSTALLED KIT
NA	CMC-32	W5SAC	PTCR Start Kit. Increases starting torque by 2 to 3x. 230V-60hz-1 phase (A voltage) only. Cannot be used in combination with SK start kit
NA	CMC-33	W5SAC	Dirty Filter Kit
E	CMA-39	W5SAC	Low Ambient Control allows compressor cooling between 0°F and 50°F outdoor temp. - fan cycling
NA	CMA-42	W5SAC	Alarm Relay Kit
NA	CMA-43	W5SAC	Outdoor Thermostat Kit used to disable compressor cooling below 50°F outdoor temp. Adjustable between 50° and 0°F
V	CMA-44	W5SAC	Kit Includes Discharge temperature sensor, Indoor Blower Airflow Press. Switch, Compressor Current Sensor, Dirty Filter Pressure Switch

24VAC LOW VOLTAGE TERMINAL DESIGNATIONS

Bard WALL MOUNT products provide 24VAC power to controllers and thermostats. They also are able to receive 24VAC signals from a controlling device. The V controls option provides additional sensors for use with a field supplied DDC controls systems. The information below provides terminal designations and how they are used in the WALL MOUNT unit. More information on low voltage connections and operational sequences is provided in the unit installation manual.

Terminal	Unit	Description
R	All Units	24VAC low voltage output (HOT Terminal)
RT	All Units	RT terminal has jumper to R terminal. When jumper is removed, R and RT can be used with normally closed contacts for fire/smoke detector for unit shutdown.
C	All Units	Ground Terminal
G	All Units	Indoor fan input
Y1	All Units	1st Stage cooling input. Economizer stage when used. Part load compressor cooling stage.
Y2	All Units	2nd Stage cooling input. Balanced Climate mode if jumper is removed between Y2 and Y3.
Y3	All Units	3rd Stage Cooling input. Compressor full load cooling stage.
B/W1	All Units	1st Stage electric heat
W2	All Units	2nd State electric heat. Jumper between W1 and W2 must be removed for staged heat
A	Vent option units only	Ventilation option input. Calls for occupied vent air intake for CRV, ERV, ECON
D	Dehum. units only	Dehumidification input on units equipped with mechanical reheat dehumidification
L	All Units	24VAC Alarm active output
1	C, J, M, V Control Opt.	Alarm relay Normally Closed Contract
2	C, J, M, V Control Opt.	Alarm relay Normally Open Contact
3	C, J, M, V Control Opt.	Alarm Relay Common Contact
9	V Controls Option Only	Discharge Air Sensor, 10K ohm
10	V Controls Option Only	Discharge Air Sensor, 10K ohm
11	G, V Control Options	Filter Switch, Normally Open Contacts
12	G, V Control Options	Filter Switch, Normally Open Contacts
13	V Controls Option Only	Blower Airflow Switch, Normally Open Contacts
14	V Controls Option Only	Blower Airflow Switch, Normally Open Contacts
15	V Controls Option Only	Compressor Current Sensor, Normally Open Contacts
16	V Controls Option Only	Compressor Current Sensor, Normally Open Contacts

/////// OPTIONAL CONTROLS AND KIT COMPONENT DEFINITIONS

Hi Pressure Control (HPC) - The high pressure control provides a means of protecting the refrigeration circuit when high system pressures occur. It is a auto-reset device that is connected to the Compressor Control Module. When activated, the compressor is disabled until pressures reach an acceptable level. If activated twice in the same cooling call, compressor operation is locked out until the cooling call is interrupted.

Low Pressure Control (LPC) - The low pressure control provides a means of protecting the refrigeration circuit when extremely low system pressures occur. It is a auto-reset device that is connected to the Compressor Control Module. When activated, the compressor is disabled until pressures reach an acceptable level.

Compressor Control Module (CCM) - The compressor control module locks out compressor operation to protect the refrigeration system based on signals from the hi and low pressure switches. It provides diagnostics to indicate when a refrigerant pressure event occurs, and also sends a signal to the alarm relay. Low incoming unit power protection suspends compressor operation when incoming voltage is too low. Suspending compressor operation avoids reverse scroll operation. The low voltage feature is adjustable or can be disables. An adjustable delay on break timer is provided. Delay on make is 2 mins. plus 10% of delay on break setting.

Alarm Relay (ALR) - The alarm relay provides a set of NO and NC pilot duty contacts that operate when the compressor control module locks out compressor operation because of a high or low system refrigerant pressure event.

Low Ambient Control (LAC) - The low ambient control pressure sensor is attached to the suction line of the system, and monitors low side system pressure. Operation of the LAC occurs as outdoor temperatures drop below the 65°F. On/Off and modulating controls are used. On/Off LAC operation cycles the condenser fan operation based on outdoor temperature. Modulating LAC operation is factory adjusted and slows the condenser fan speed RPM based on outdoor temperature.

Crankcase Heater (CCH) - The heater is a belly band that is installed around the base of the compressor that applies heat when the refrigeration system is not operational. This heat is meant to prevent refrigerant oil migration when the unit is not running. Normal scroll compressor use does not require the use of the CCH, and this option is only recommended for northern areas of the US and Canada with extreme cold operation. Field Install Option Only.

Outdoor Thermostat (ODT) - The outdoor thermostat measures outdoor temperatures and includes relay contacts (NO). The relay is located on the outer control panel and the sensor bulb is mounted to the fan shroud in the outdoor condenser section. When wired into the cooling signal inside the control panel, compressor operation can be disabled when temperatures are below the adjustable setting. Adjustment range is 0°F to 50°F.

PTCR Start Kit - PTCR (Precision Temperature Coefficient Resistor) start kit includes the start device and wires needed for installation. The device is located inside the unit control panel near the compressor capacitor and provides an increase in starting torque. The PTCR Start Kit is not normally required when a clean, stable power source is available for the unit. The kit can only be used in 230 Volt single phase units.

Start Capacitor and Potential Relay Start Kit - The kit includes a start capacitor and relay that is energized during startup of the compressor. The capacitor, relay, and needed wires are provided in a metal enclosure that is field installed in the outdoor section attached to the back. The Start Capacitor Kit is not normally required when a clean, stable power source is available for the unit. The kit can only be used in 230 Volt single phase units. Start capacitor kit cannot be used with the PTCR start kit installed.

Dirty Filter Switch Indicator (DFS) - The switch is adjustable and measures pressure drop across the unit filter surface. When pressure drop is higher than the switch setting NO and NC contacts are provided to indicate the filter needs to be serviced.

Discharge Air Sensor - The discharge air sensor provides a temperature reading of the supply air leaving the unit. The sensor is a 10K OHM @ 77°F measuring device. It is installed in the supply airstream in the heater bracket. Airflow Switch - The airflow switch measures the pressure differential between the blower inlet and outlet. It is located directly above the blower partition. Relay contacts (NO) are provided for V controls option that indicates the indoor blower assembly needs to be serviced. The F controls option has indicator light only.

Compressor Current Sensor - The compressor current sensor indicates when the compressor is operational by measuring Amp draw. It is located inside the unit control panel. Relay contacts (NO) are provided to indicate the compressor is not operating.

CABINET AND CLEARANCE DIMENSIONS - W**AC SERIES UNITS

CLEARANCES REQUIRED FOR SERVICE ACCESS AND ADEQUATE CONDENSER INLET AIRFLOW

MODELS	LEFT SIDE	RIGHT SIDE
W5SAC	20"	20"

1.) Follow all national, state, and local codes and regulations regarding the installation of heating and cooling equipment regarding Single Packaged Vertical Units (SPVU) including electrical access clearances.
2.) Field ventilation installation with the unit installed requires 40" on the left or right side of the unit.
3.) Bard recommends a minimum of 10 ft. between the unit front condenser air outlet and solid objects including fences, walls, bushes, and other airflow obstructions.
4.) Bard recommends a minimum of 15 ft. between the condenser air outlets of 2 units that are facing each other.
5.) Bard recommends a minimum clearance of 4" under the unit cabinet for condenser defrost drainage during heat pump operation.

MINIMUM CLEARANCES REQUIRED TO COMBUSTIBLE MATERIALS

MODELS ①	SUPPLY AIR DUCT FIRST THREE FEET	CABINET
W5SAC	1/4"	0"

① Refer to the Installation Manual for more detailed information.

DIMENSIONS OF BASIC UNIT FOR ARCHITECTURAL & INSTALLATION REQUIREMENTS (NOMINAL)

MODEL	WIDTH (W)	DEPTH (D)	HEIGHT (H)	SUPPLY		RETURN															
				A	B	C	D	E	F	G	I	J	K	L	M	N	O	R	S	T
W5SAC	42	25.52	93.00	9.88	29.88	15.88	25.52	43.88	12.63	45	30	59.75	35.06	61.72	58.72	8.82	43	1.438	16	10.00

① Wall Mounting holes in side flanges are 0.375.

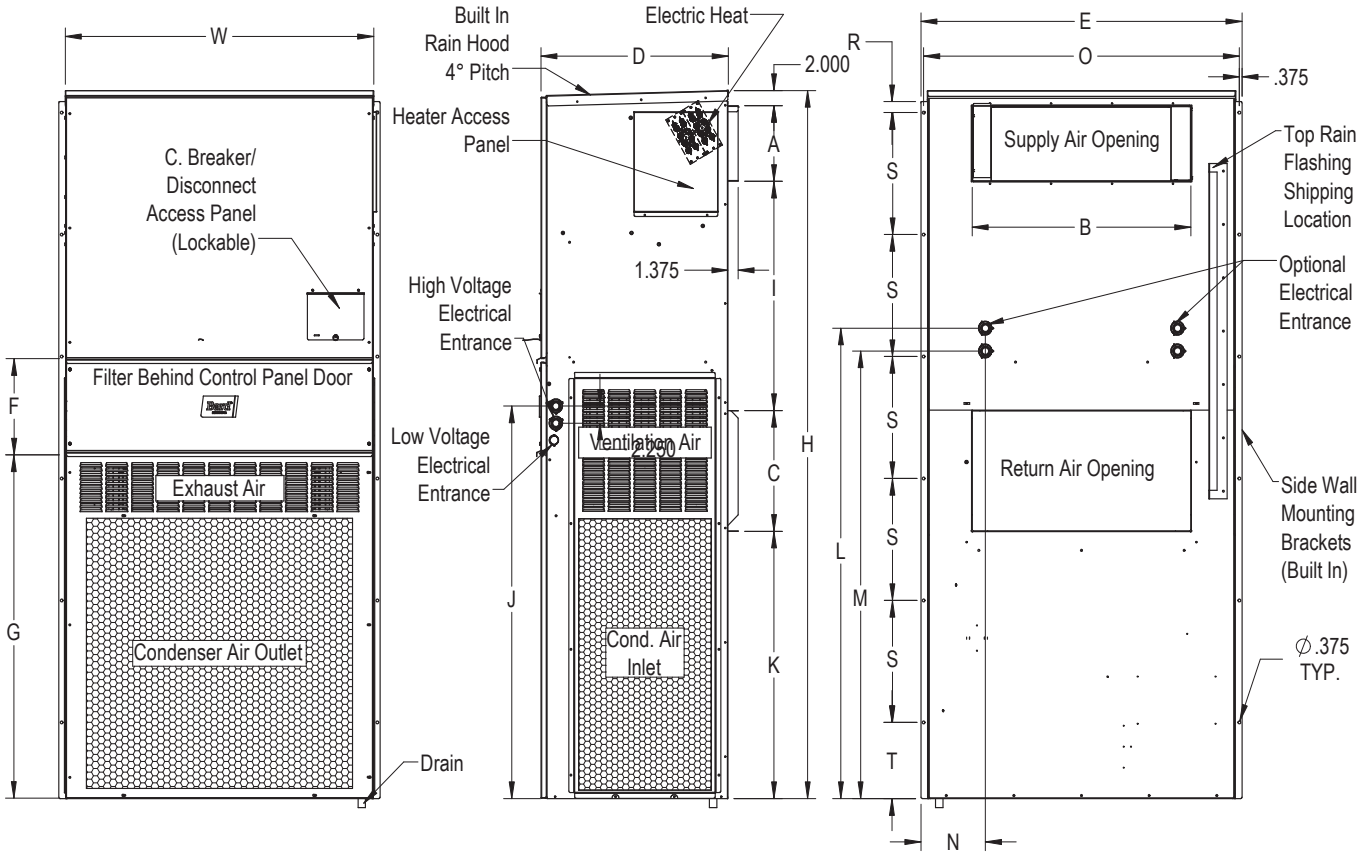

WALL CURB ACCESSORIES

Optional wall curb accessories are available to help reduce vibration through the outer wall surface or to use existing wall openings when replacing equipment. Follow all static pressure airflow requirements, safety and installation guidelines in the instructions provided with the curb and WALL MOUNT products.

CURB	UNITS USING CURB	DESCRIPTION
WMICF5-*	W5SAC	Provides vibration isolation for reduced sound transmission through wall
WWC5-*	W5SAC	Install to use with existing wall openings. Wall openings must provide sufficient airflow

* Color Option

INDOOR SOUND REDUCTION ACCESSORIES

Optional sound accessories are available to help reduce sound transmission from the supply and return openings inside the indoor area. Follow all static pressure airflow requirements, safety and installation guidelines in the instructions provided with the accessories and WALL MOUNT products.

ACCESSORY	UNITS USING ACCESS.	DESCRIPTION
WAPR11-*	W5SAC	Acoustical return air plenum that offsets the return air path. Air intake at floor level

* Color Option

NON-DUCTED SUPPLY AND RETURN GRILLES

Supply and return louver grilles are of a brushed aluminum finish. 2” flange versions are recommended for standard installations to allow grille attachment when large wall openings are present. Return filter grilles are available for filter access from an indoor area. Filter grilles do not include a filter, and are not recommended for unit with ventilation due to filter location. A manual damper return grille is available for W42 and W72 models. The manual damper is adjustable, and is only recommended for installations where increased return duct static pressure is required.

GRILLE NO.	UNITS USING GRILLE	DESCRIPTION OF LOUVER GRILLE
SG-5W	W5SAC	10" x 30" with 2" Flange 4 way deflection supply grille. **Use for standard installations**
RG-5W	W5SAC	16" x 30" with 2" Flange return grille. **Use for standard installations.**
RFG-5W	W5SAC	16” x 30” with 1” Flange return filter grille. **Not recommended for use as primary filter for units with vent options**
RGD-5	W5SAC	16" x 30" with 1" Flange return grille. Manual damper used to restrict return air

NON-DUCTED SUPPLY GRILLES - SPREAD AND THROW CHARACTERISTICS

One of the most important setup procedures for non-ducted supply applications is to adjust the 4 way supply grille blade positions. Placement of equipment, occupants, the thermostat, and room size can all play an important role in deciding how the conditioned supply air must be directed in an indoor area. The chart below may be used as a reference tool to help with this process.

SUPPLY GRILLE	AIRFLOW CFM	DEFLECTION	VELOCITY	TOTAL PRESSURE	THROW
SG-5W	1450 CFM	0°	968	.073" WC	51-73 ft.
		22.5°	1071	.103" WC	39-56 ft.
		45°	1331	.169" WC	28-40 ft.
	2000 CFM	0°	1336	.130" WC	61-86 ft.
		22.5°	1477	.188" WC	54-65 ft.
		45°	1835	.335" WC	33-46 ft.

CONTROLLER, THERMOSTAT, HUMIDISTAT AND CO2 VENTILATION CONTROL OPTIONS

Bard provides a wide variety of controllers for equipment cooling, thermostats, for equipment and comfort cooling, humidistats for dehumidification units, and CO2 sensors for ventilation control. Lockable thermostat covers are available for applications where security or supervisory control is desired.

CONTROLLER	OPERATION	DESCRIPTION
MC-4002	2 Unit Lead/Lag Controller	Standard Lead/Lag Controller with remote alarming capability.

THERMOSTAT	OPERATION	DESCRIPTION
8403-059	2 Heat/2 Cool	Programmable or Nonprogrammable
8403-060	3 Heat/3 Cool	Programmable or Nonprogrammable, ventilation output, dehumidification operation
8403-090	2 Heat/2 Cool	Temp. Settings per Day 4, 2, 1, 0 Programs per Week 7, 5-2, 5-1-1 or Nonprogrammable
8403-092	2 Heat/2 Cool	Programmable or Nonprogrammable, ventilation output, Wi-Fi

HUMIDISTAT	OPERATION	DESCRIPTION
8403-038	Humidity %RH	Easy to use w/SPDT switching. Ratings: Pilot duty 50VA @24V, 120VA @ 120/240V
8403-047	Humidity %RH	Electronic with display, EEPROM memory, lockable keypad, humidity sensor calibration

CO2 CONTROL	OPERATION	DESCRIPTION
8403-056	CO2 PPM	CO2 ventilation control with digital display. Use with JADE Economizer for modulating ventilation
8403-067	CO2 PPM	CO2 ventilation control with digital display. On/Off or modulating ventilation operation

THERMOSTAT COVER*	SIZE	DESCRIPTION
8405-003	(Inside) 5-1/16" H x 6-1/16" W (Outside) 6-1/2" H x 7-1/2" W x 2-15/16" D	Clear acrylic with ventilation. Fits all thermostats except 8403-060
8405-005	(Inside) 5-7/8" H x 8-3/8" W (Outside) 7-1/4" H x 9-3/4" W x 3-3/8" D	Clear acrylic with ventilation. Fits all thermostats.
8405-006	(Inside) 5-1/16" H x 6-1/16" W (Outside) 6-3/8" H x 7-3/8" W x 2-7/8" D	Clear acrylic with ventilation. Fits all thermostats except 8403-060
8405-007	(Inside) 5-7/8" H x 8-3/8" W (Outside) 7-1/8" H x 9-5/8" W x 3-1/4" D	Beige painted steel cover with ventilation. Fits all thermostats.

* Thermostat covers include ventilation, but may effect temperature control reaction time. If security control lockout is needed, the 8403-060 thermostat provides input control lockout features.

Bard Manufacturing Company, Inc.
1914 Randolph Dr., Bryan, OH 43506
419-636-1194
www.bardhvac.com

Due to our continuous product improvement policy, all specifications subject to change without notice.

Before purchasing this appliance, read important energy cost and efficiency information available from your retailer.